Waterway 2011 Spa Product Buyer's Guide

Made in the USA

Waterway™

Waterway 2011 Spa Product Buyer's Guide

Genuine. It's not just an expression with us. We think it's one of the most important things you should look for when buying and installing pool and spa equipment. American-made products should be safe, reliable and the best value for your money. That's the way Waterway products are made… and always have been.

Designed, Engineered, and Manufactured in the USA with Ratings You Can Trust.

Made in the USA

Waterway™

Thank you...

And welcome to our new Waterway 2011 Spa Products Buyer's Guide. Waterway enters its 38th year of industry innovation, performance and competitively priced product offerings with several new developments for 2011. You will find our new Reverse Swirl and Nova Storm Jets, In-Ground Jet Bodies, Spa Steps, Deluxe Skimmer and Skim Filter, as well as a whole variety of LED products including Top Side Valves, Cabinet Lights, Cup Holders, Water Features, and more.

We've separated out our Spa products specifically for our Spa OEMs to provide easy access to all the products you need. The overall organization of the catalog has been streamlined for improved browsing. We hope this will help you navigate your way through our catalog efficiently.

A digital version of this catalog is also available on our website. It may be obtained through your distributor or by contacting Waterway directly by phone 805-981-0262 or email waterway@waterwayplastics.com.

For product updates, manuals, news releases and a digital version of this Waterway catalog, be sure and visit us at www.waterwayplastics.com.

We wish you the best of success in 2011. Again, thank you for choosing Waterway. It is appreciated.

© 2010 Waterway Plastics

For information or assistance, contact:

Waterway Plastics Customer Service Department: 805.981.0262
Waterway Plastics, 2200 East Sturgis Road, Oxnard, CA 93030
Telephone: 805.981.0262 • Fax: 805.981.9403 • Toll Free Fax: 888.772.5387
www.waterwayplastics.com • waterway@waterwayplastics.com

Pricing:
Effective **November 1, 2010**. Pricing can change at any time on any part without prior notice.

Product Disclaimer:
All illustrations, photographs and specifications in this publication are based on product information available at the time of printing. Waterway reserves the right to make changes at any time, without giving prior notice, to colors, materials, specifications, part numbers and prices and to discontinue product or product components.

Ordering:
To ensure prompt and proper shipment, please order by product part number and description. Be sure to include the correct (last digit) number for the color desired. Specially quoted product numbers must not be changed (even by one digit), or the pricing will not be recognized. Products and prices are subject to change without notice.

All orders must be a minimum of $50.00.

Terms:
All sales are cash with order until credit is established, after which, terms are net 30 days.

Shipments:
All shipments are F.O.B. Oxnard, California.

Claims:
All claims must be made within 30 days after receipt of merchandise.

Returns:
All returns are subject to the Waterway Limited Warranty Policy and written approval, and must be accompanied by an "RGA" (Return Goods Authorization) form or number issued by Waterway prior to returning the merchandise. Unauthorized returns will not be accepted. Freight must be prepaid. Waterway will not accept returned merchandise after 90 days of shipment and/or not in original resalable condition.

Information Regarding Lost or Damaged Merchandise:
Our responsibility for any shipment ceases when the carrier signs the Bill of Lading. All shipments should be inspected immediately upon arrival. If cartons, packages or crates are received in short or damaged condition, it is important that the driver be notified and the recipient should insist on a notation of the loss or damage across the face of the freight bill.

If there is no indication of damage on the freight bill, no claim can be enforced against the carrier.

If concealed loss or damaged merchandise is discovered, notify the carrier immediately and request an inspection, and retain the shipping carton/container. A concealed damage report must be made within 15 calender days of delivery of the shipment, or the carrier will not entertain any claim for the loss. The carrier agent will perform an inspection and will normally grant a concealed damage notation. IF THE CARRIER RECEIVES A CLEAR RECEIPT FOR THE MERCHANDISE THAT HAS BEEN DAMAGED IN TRANSIT, IT IS AT THE RECIPIENT'S OWN RISK AND EXPENSE.

Waterway is willing to assist in collecting claims for loss or damage, but our willingness does not make us responsible for collection of claims or for the replacement of merchandise.

For additional information or assistance in this regard, please contact:

Waterway Plastics
Customer Service
805.981.0262

Waterway Limited Warranty

All products of Waterway carry warranties. The nature and length of the warranty will depend upon the product and are set forth below:

All plastic parts such as jets, valves, skimmers, manifolds, suctions, lights and other plastic components manufactured by Waterway are warranted to be free of defects in workmanship and materials for a period of 36 months from the date of purchase. This warranty does not cover o-rings, light bulbs, filter cartridges, D.E. grids, pressure gages or any parts not manufactured by Waterway.

All speakers manufactured by Waterway are warranted to be free of defects in workmanship and materials for a period of 12 months from the date of manufacture.

All pumps equipped with a 56-frame motor are warranted to be free of defects in workmanship and materials for a period of 36 months from the date of motor manufacture (pump seals warranty for 12 months, only replacement seals will be sent).

All pumps equipped with a 48-frame motor are warranted to be free of defects in workmanship and materials for a period of 24 months from the date of motor manufacture (pump seals warranty for 12 months, only replacement seals will be sent).

The Mustang, Iron Might, Tiny Might, Hi-Flo and Center Discharge pumps are warranted to be free of defects in workmanship and materials for a period of 18 months from the date of motor manufacture (pump seal warranty for 12 months, only replacement seals will be sent).

The Santanna and Stealth blowers are warranted to be free of defects in workmanship and materials for a period of 12 months from the date of installation. This includes the motor.

All thermo plastic molded filter bodies and rotational molded sand filter bodies have a warranty of three years from the date of purchase on a prorated life basis (to the original owner only).

All PVC Hose and Tubing are warranted to be free from defects in material and workmanship under normal use and service for a period of two (2) years from the date of shipment by Waterway.

Merchandise damaged as a result of carelessness, improper handling, rodents, insects (termite) or misapplication is specifically excluded from this warranty.

If within the warranty period, any such products shall prove defective, it shall be repaired or replaced at Waterway's option as follows:

1. The original retail purchaser shall first contact the point of purchase or the installing dealer, as soon as possible after discovery of the defect, but in no event later than the expiration date of this warranty. Processing of warranty claims should initiated by the point of purchase or the installing dealer.

2. A Return Good Authorization (RGA) form must be completed and submitted to Waterway by the point of purchase or the installing dealer or OEM.

3. Waterway will issue an RGA for eligible items that are not out of their warranty period.

4. Waterway will advise the address to which the defective items may be shipped. The customer must pay for all shipping charges (no product shall be returned to Waterway without prior consent).

5. After receipt of the products, supporting documents and verification of the nature and cause of the defect, Waterway will replace or repair the defective products or issue warranty credit for eligible items at Waterway's option.

In no event shall Waterway be liable for labor or material charges in connection with removal or replacement of the defective products. Waterway is not liable for incidental or consequential damages, loss of profit, loss of time, inconvenience and incidental expenses.

This warranty is limited and shall be in lieu of any other warranties, expressed or implied, including but not limited to , any implied warranty or merchantability or fitness for a particular purpose. There are no other warranties that extend beyond the description of the face hereof. The liability of Waterway arising out of its supply of said products, or their use, shall not in any case exceed the cost of correcting defects in the products as above set forth.

Although Waterway Plastics provides all information, recommendation, or advice regarding its products in good faith, each user bears full responsibility for making its own determination as to suitability of Waterway's products, recommendations, or advice for its own particular use. Each user must identify and perform all tests and analysis necessary to assure that its finished products incorporating Waterway's parts or products will be safe and suitable for use under end-use conditions. This includes but not limited to verification of exposure to ambient operating conditions, adhesives, foams and any other type chemicals during the assembly or the end use conditions. Due to environmental conditions out of our control, we are unable to warranty discolorations or corrosion on stainless steel parts.

This warranty does not apply if the failure is caused or contributed to by any of the following: improper handling, improper storage, improper installation, abuse, unsuitable application of the product, lack of reasonable and necessary maintenance, improper packaging for return, or repairs made or attempted by any other company, which in the judgment of Waterway adversely affects the product's performance and reliability. Waterway reserves the right to change its warranty at any time.

Some states do not allow the exclusion or limitation of incidental or consequential damages, so the above limitation or exclusion may not apply to you. This warranty gives you specific legal rights, and you may also have other rights, which vary from state to state.

Color Reference

Last Digit of Part No.	Color/Metal Finish
0	White
1	Black
2	Bone
3	Blue (Lights)
4	Red (Lights)
5	Red and Blue (Lights)
7	Gray
8	Clear
9	Call for other colors, metal finishes and special orders
9-BEI	Beige (Tan)
9-DKB	Dark Blue
9-DKG	Dark Gray
9-DSG	Dark Silver Glitter (DSG)
9-LTB	Light Blue
9-STS	Sterling Silver

Shurflex™ Hose & Tubing 1

Jets 2

Air Injectors 35

Topside Valves 37

Air Controls 45

Drains & Suctions 47

Water Features 54

Lighting 57

Speakers 63

Skimmers & Filters 66

Pumps & Equipment Bases 79

Slice Valves / Gate Valves / Check Valves 92

Unions 94

Ells / Tees / Wyes 102

Manifolds 107

Miscellaneous & Accessories 119

Replacement Parts 125

Technical Information 141

Index 149

Shurflex™ BRAND

Pool, Spa, & Bath Hose for Tubs and Swimming Pools

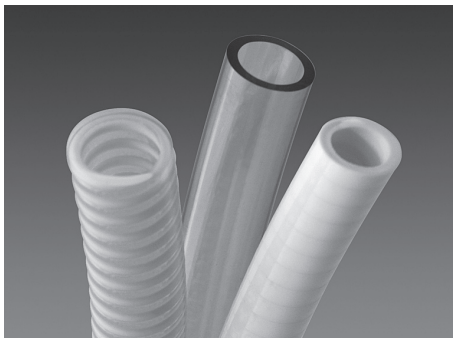

AVAILABLE IN:

- Clear Vinyl: ⅛", ¼", ⅜", ¾", and ¾" x 1 1⁄16"
- White Vinyl: ⅜", ¾", and 1" x 1 ¼"
- Shur-Grip: ¾", ¾" thin, 1 ½", and 2"
- Flex: ½", ¾", 1", 1 ¼", 1 ½", 2", 2" thin, 2 ½", and 3"

Hose and Tubing - Individual Rolls

Call for pricing.

Add "B" to end of part number for bulk packed rolls (not individually wrapped).

Replace "x" in part number with the color of your choice.

Part No.	Description	Color	Ft. / Roll
110-010x	Vinyl - ⅛" x ¼"	Clear (0), Red (R)	500
110-011x	Vinyl - ¼" x ⅜"	Clear (0), Red (4)	600
110-012x	Vinyl - ⅜" x 9⁄16"	Clear (0), White (W)	500
110-014x	Vinyl - ¾" x 1"	Clear (0), White (W)	150
110-0150	Vinyl - ¾" x 1 1⁄16"	Clear	100
110-016W	Vinyl - 1" x 1 ¼"	White	100
120-011x	Flex - ½"	White (0), Black (1)	100
120-012x	Flex - ¾"	White (0), Black (1)	100
120-013x	Flex - 1"	White (0), Black (1)	50
120-018x	Flex - 1 ¼"	White (0), Black (1)	50
120-014x	Flex - 1 ½"	White (0), Black (1)	50
125-011x	Flex - 1 ½" x 100 ft.	White (0), Black (1)	100
120-015x	Flex - 2"	White (0), Black (1)	50
125-012x	Flex - 2" x 100 ft.	White (0), Black (1)	100
120-025x	Flex - 2" thin	White (0), Black (1)	50
120-016x	Flex - 2 ½"	White (0), Black (1), Gray (7)	50
120-017x	Flex - 3"	White (0), Black (1), Gray (7)	50
130-0110	Shur-Grip - ¾"	Clear/White	100
130-021x	Shur-Grip - ¾" thin	Clear/White (0), White (W)	100
130-0120	Shur-Grip - 1 ½"	Clear/White	50
130-0130	Shur-Grip - 2"	Clear/White	50

Hose and Tubing - Pallets

Call for pricing.

Add "B" to end of part number for bulk packed rolls (not individually wrapped).

Replace "x" in part number with the color of your choice.

Part No.	Description	Color	Ft. / Pallet	Rolls / Pallet
110-010xP	Vinyl - ⅛" x ¼"	Clear (0), Red (R)	36,000	72
110-011xP	Vinyl - ¼" x ⅜"	Clear (0), Red (4)	33,000	55
110-012xP	Vinyl - ⅜" x 9⁄16"	Clear (0), White (W)	20,000	40
110-014xP	Vinyl - ¾" x 1"	Clear (0), White (W)	6,000	40
110-0150P	Vinyl - ¾" x 1 1⁄16"	Clear	4,000	40
110-016WP	Vinyl - 1" x 1 ¼"	White	2,800	28
120-011xP	Flex - ½"	White (0), Black (1)	6,800	68
120-012xP	Flex - ¾"	White (0), Black (1)	5,600	56
120-013xP	Flex - 1"	White (0), Black (1)	2,800	56
120-018xP	Flex - 1 ¼"	White (0), Black (1)	1,200	24
120-014xP	Flex - 1 ½"	White (0), Black (1)	1,200	24
125-011xP	Flex - 1 ½" x 100 ft.	White (0), Black (1)	1,200	12
120-015xP	Flex - 2"	White (0), Black (1)	900	18
125-012xP	Flex - 2" x 100 ft.	White (0), Black (1)	900	9
120-025xP	Flex - 2" thin	White (0), Black (1)	900	18
120-016xP	Flex - 2 ½"	White (0), Black (1), Gray (7)	800	16
120-017xP	Flex - 3"	White (0), Black (1), Gray (7)	400	8
130-0110P	Shur-Grip - ¾"	Clear/White	5,600	56
130-021xP	Shur-Grip - ¾" thin	Clear/White (0), White (W)	5,600	56
130-0120P	Shur-Grip - 1 ½"	Clear/White	900	18
130-0130P	Shur-Grip - 2"	Clear/White	800	16

215-9860

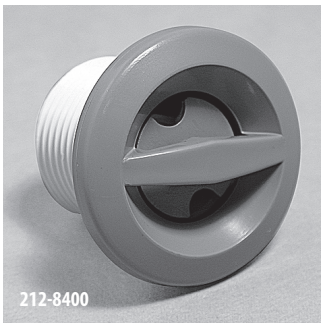
212-8400

215-9957

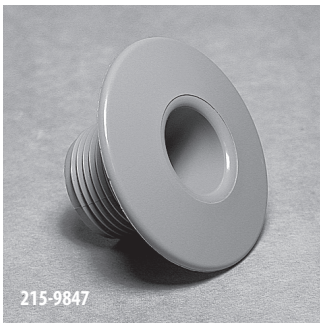
215-9847

212-9890S

215-9837

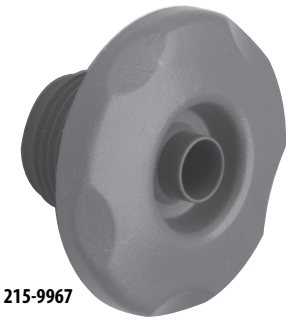
215-9967

212-9967S

212-8810

212-8837

212-9900S / 215-9907

Cluster Jet Internals

Part No.	Description	Case Quantity	List (US $)
215-9860	Ozone - Smooth	200	2.12
212-9870	Ozone - Stainless Steel	500	4.70
212-8400	Front Access - Pulsator - Smooth	200	3.69
215-9950	Fixed Directional - 5-Scallop	500	2.60
215-9840	Large Face - Smooth	150	2.60
212-9890S	Non-Adjustable - Large Face - Stainless Steel - Thick	250	5.14
215-9820	Non-Adjustable - Large Face - Textured - Thick	500	2.60
215-9830	Large Face - Textured - 5-Scallop	500	3.14
215-9960	Fixed Directional - Large Face - 5-Scallop	500	3.68
212-9960S	Fixed Directional - Large Face - Stainless Steel	250	7.00
212-8810	Directional - Large Face - Smooth	250	3.69
212-8830	Directional - Large Face - 5-Scallop	250	3.69
215-9900	Extra Large Face - 2 ⅜" - Smooth	250	2.97
212-9900S	Extra Large Face - 2 ⅜" - Stainless Steel	250	5.91

FEATURES:

- Multi body construction allows for universal plumbing (back body can be plumbed facing in any direction)
- Fits any existing cluster internal including new Fixed Eyeball designs
- ¼" Nozzle for 7 GPM @ 12 PSI flow rate
- Available with flat or grommet style gaskets

NEW

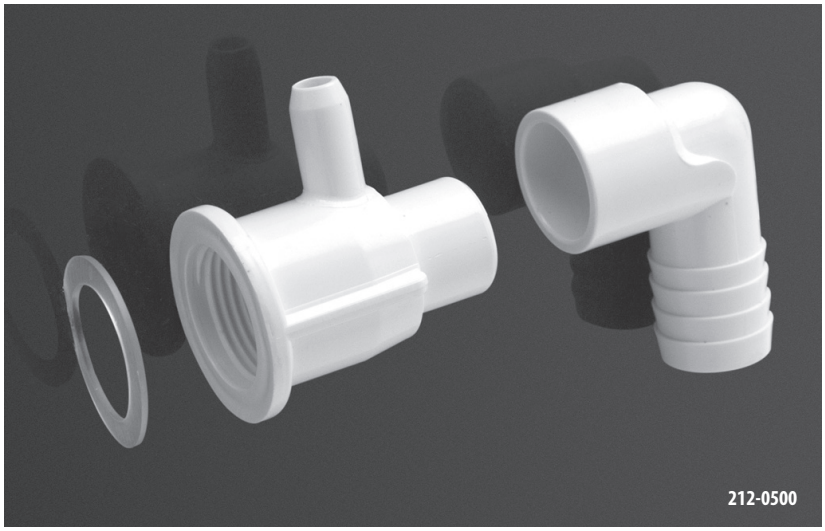

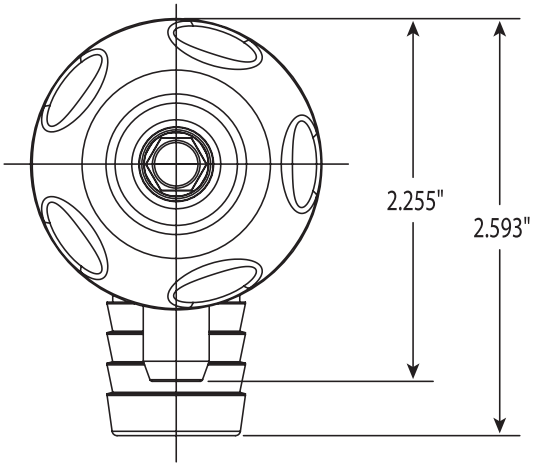

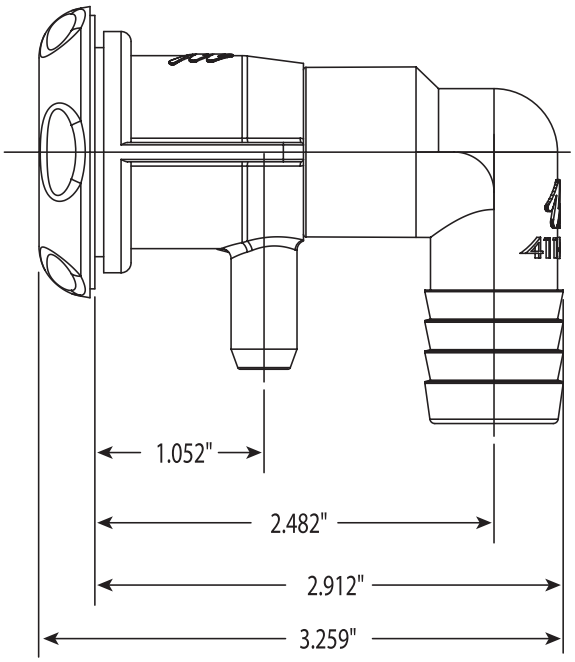

Universal Cluster Jets

Part No.	Description	Case Quantity	List (US $)
212-0500	Universal Cluster Jet Body Assembly - ¾" RB x 90° Ell - Flat Gasket	200	4.47
212-0500G	Universal Cluster Jet Body Assembly - ¾" RB x 90° Ell - Grommet Gasket	200	4.47

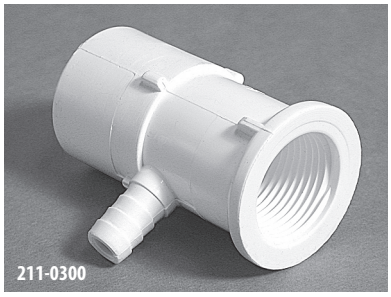
211-0300

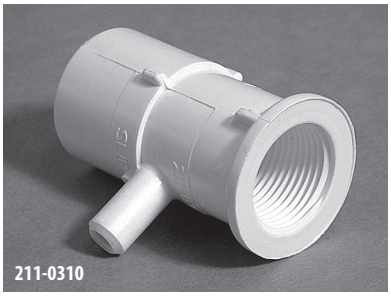
211-0310

212-0090

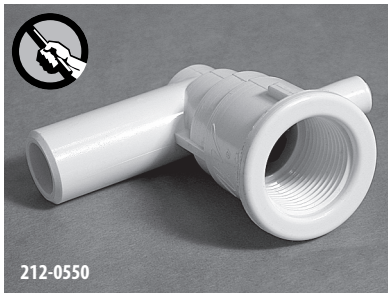
212-0550

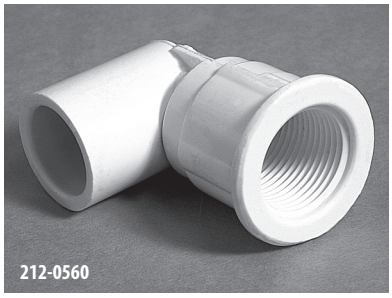
212-0560

212-0580

Ozone Cluster Jet Body Assemblies

Part No.	Description	Case Quantity	List (US $)
211-0300	Straight Body - ⅜" RB Air x ½" S / 1" Spigot Water	250	4.19
211-0310	Straight Body - ½" S Water / 1" Spigot x ⅜" SB Air	250	4.19
211-0320	Straight Body - ⅜" RB Air x ½" S Water	250	4.19
212-0090	Ell Body - ⅜" RB Air x ¾" RB Water with Nozzle	200	4.19
212-0540	Ell Body - No Air x ¾" S Water with Nozzle	180	4.19
212-0550	Ell Body - ⅜" B Air x ¾" SB Water with Nozzle	200	4.19
212-0560	Ell Body - No Air x ½" S Water with Nozzle	180	4.19
212-0580	Ell Body - ⅜" RB Air x ½" S Water with Nozzle	200	4.19
212-0590	Ell Body - ⅜" RB Air x ¾" S Water with Nozzle	180	4.19

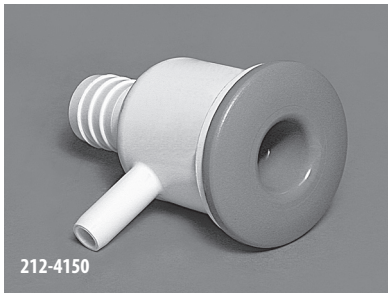
212-4150

Euro Blaster Jet Body and Wall Fitting Assembly

Part No.	Description	Case Quantity	List (US $)
212-4150	¾" RB x ⅜" SB - ½" Orifice - 25 GPM @ 15 PSI	200	8.39

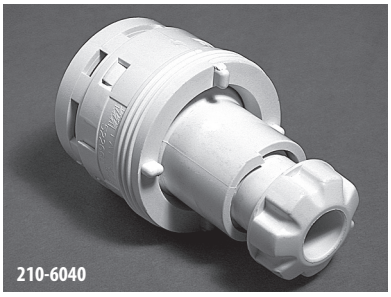
210-6040

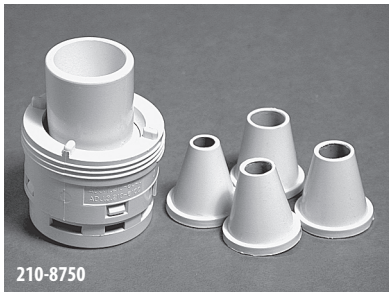
210-8750

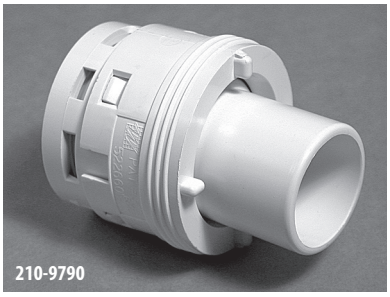
210-9790

Standard Poly Jets

Part No.	Description	Case Weight	Case Quantity	List (US $)
210-6040	Adjustable - Caged Style	11.6 lbs.	75	10.80
210-8750	Monster - Caged Style (5⁄16" - 3⁄8" - 7⁄16" - 1⁄2" Orifice)	13 lbs.	50	10.80
210-9790	Whirlpool - Caged Style (3⁄4" Orifice)	12 lbs.	50	10.80

210-5830

210-5860

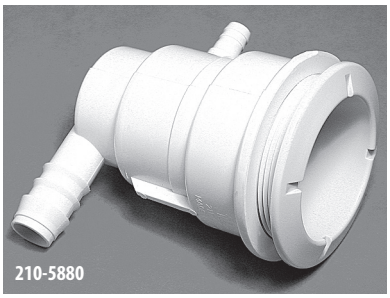
210-5880

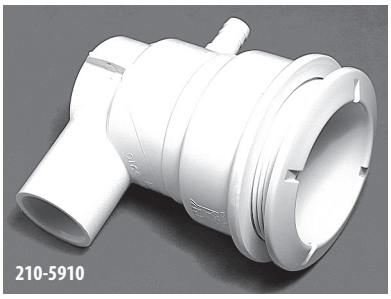
210-5910

210-5950

210-9500

Poly Jet Body Assemblies

Part No.	Description	Case Quantity	List (US $)
210-5830	1" S Air x 1" S Water - No Top Plug	40	10.80
210-5860	Tee Body - 1" S Air x 1 1⁄2" S Water - with Top Plug	30	10.80
210-5880	Ell Body - 3⁄8" RB Air x 3⁄4" RB Water	60	10.80
210-5910	Ell Body - 3⁄8" RB Air x 3⁄4" S Water	60	10.80
210-5950	Straight Body - 1 1⁄2" S Water x 1⁄2" / 1" Spigot Air	60	10.80
210-9500	32mm Air x 32mm Water	30	10.80

All Poly Jet body assemblies include a body and wall fitting.

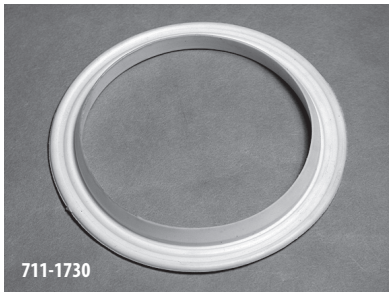
711-1730

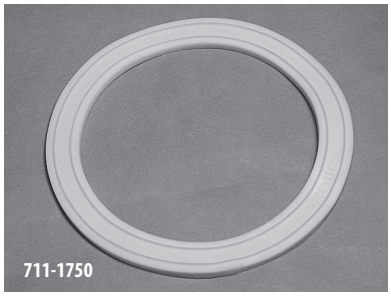
711-1750

916-1250

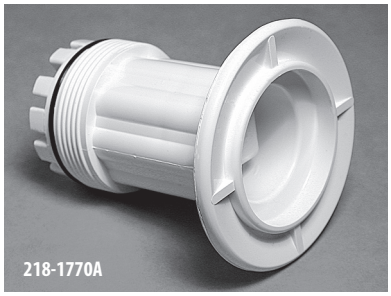
218-1770A

Poly Jet Accessories

Part No.	Description	Case Quantity	List (US $)
711-1730	Grommet Gasket	1400	0.50
711-1750	Standard Gasket (Thin)	500	0.50
711-4750	3⁄16" Gasket (Thick)	500	0.77
916-1250	Escutcheon - Stainless Steel *(Standard Poly Jets only)*	--	4.65
218-1770A	Wrench/Test Plug with O-Ring Assembly	150	5.39
805-0132	Wrench O-Ring	25	0.55

NEW
Thread-In Style Jets

Adj. Cluster Storm

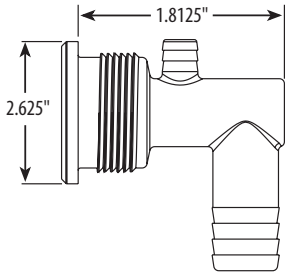

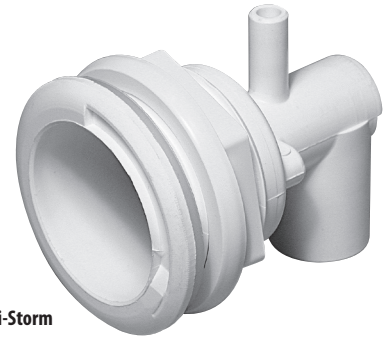

Mini-Storm

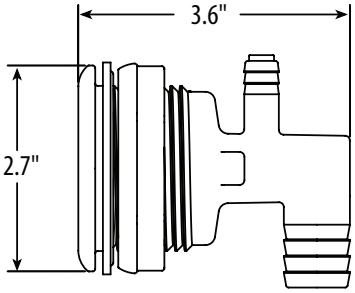

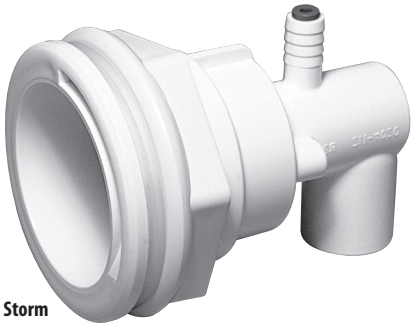

Poly Storm

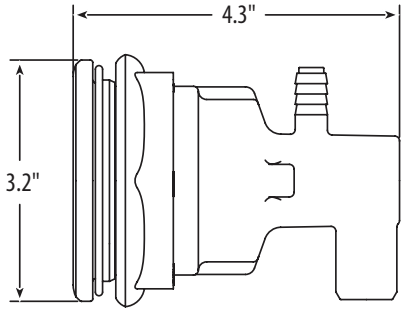

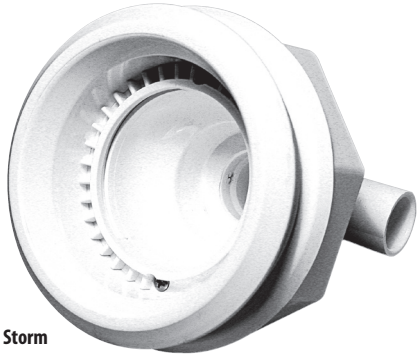

Power Storm

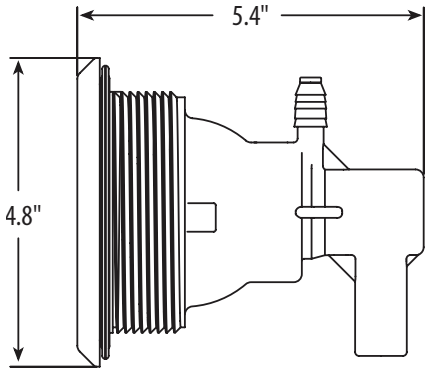

Mega Storm

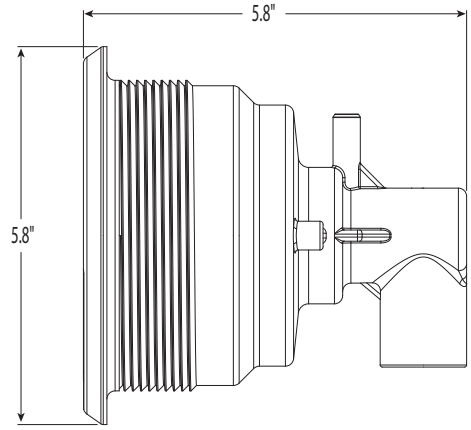

Adjustable Cluster Storm Jet Body Assemblies

Part No.	Description	Case Quantity	List (US $)
228-1720G	Body Assembly - ¾" RB x No Air	100	6.44
228-1560G	Body Assembly - ¾" SB x ⅜" RB - Shur-Grip SP	100	6.44
228-1550G	Body Assembly - ¾" RB x ⅜" RB SP	100	6.44
228-1570G	Body Assembly - ¾" S x ⅜" RB	100	6.44
228-1580G	Body Assembly - ½" S x ⅜" RB	100	6.44

Mini-Storm Jet Body Assemblies

Part No.	Description	Case Quantity	List (US $)
228-0320	Body Assembly - ½" S x ⅜" B	100	6.78
228-0310	Body Assembly - ¾" S x ⅜" B	100	6.78
228-0300	Body Assembly - ¾" RB x ⅜" RB SP	100	6.78
228-0330	Body Assembly - ¾" SB x ⅜" RB - Shur-Grip SP	100	6.78

Poly Storm Jet Body Assemblies

Part No.	Description	Case Quantity	List (US $)
228-0420	Body Assembly - ½" S x ⅜" B	70	7.68
228-0410	Body Assembly - ¾" S x ⅜" B	70	7.68
228-0400	Body Assembly - ¾" RB x ⅜" RB SP	70	7.68
228-0430	Body Assembly - ¾" SB x ⅜" RB - Shur-Grip SP	70	7.68

Power Storm Jet Body Assemblies

Part No.	Description	Case Quantity	List (US $)
228-0030	Body Assembly - ½" S x ⅜" SB	25	8.38
228-0020	Body Assembly - ¾" S x ⅜" SB	25	8.38
228-0530	Same Side Body Assembly - ¾" S x ⅜" SB	25	8.38
228-0040	Body Assembly - ¾" RB x ⅜" RB SP	25	8.38
228-0010	Body Assembly - ¾" SB x ⅜" RB - Shur-Grip SP	25	8.38

Mega Storm Jet Body Assemblies

Part No.	Description	Case Quantity	List (US $)
223-2100	Body Assembly - ¾" S x ⅜" B	20	11.96
223-2110	Body Assembly - ¾" SB x ⅜" B - Shur-Grip SP	20	11.96
223-2120	Body Assembly - ¾" RB x ⅜" B	20	11.96

***Note**: All part numbers above are for the new thread-in style jets. To order a snap-in style jet body, change the part number prefix to 212-xxxx.*

***Note**: Jet Bodies include flat gaskets. Grommet gaskets available upon request. CPVC bodies available upon request.*

NEW
Thread-In Style Jets

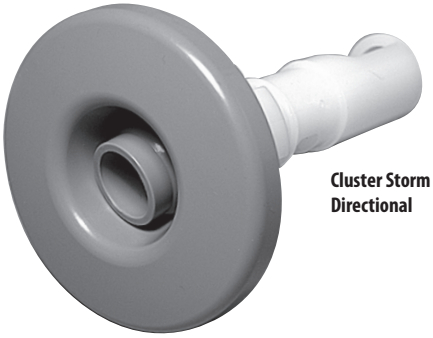

Cluster Storm Directional

Mini-Storm Galaxy

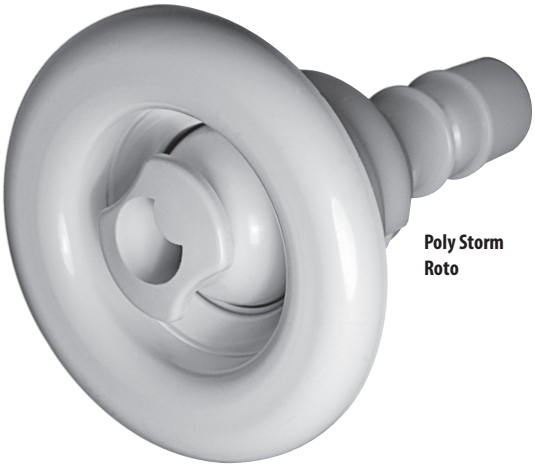

Poly Storm Roto

Power Storm Massage

Pat. #5,920,925

Directional / Twirl
(Steady Stream / Stationary Eyeball)

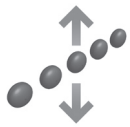

Roto
(Adjustable Rotating Stream)

Twin Roto
(Rotating Dual Stream)

Massage
(Pulsating Stream)

Galaxy
(Gentle Shower)

Multi-Massage
(Multi-Shower)

Rifled
(Enhanced Steady Stream)

Twister
(Adjustable Rotating Stream)

Acupressure
(Pressure Ball)

Storm Jets - Smooth Plastic

Part No.	Jet Type	Eyeball	Size	Style	Case Qty.	List (US $)
229-1510	Adj. Cluster Storm	Directional	2 ¼"	Standard	300	3.61
229-1530	Adj. Cluster Storm	Pulsator	2 ¼"	Standard	300	4.89
229-0100	Adj. Cluster Storm	Rifled	2 ¼"	Standard	300	3.61
229-9700	Adj. Cluster Storm	Shower	2 ¼"	Standard	300	3.61
229-3800	Adj. Cluster Storm	Shower - 100% Shut-Off	2 ¼"	Standard	300	4.64
229-7900	Mini-Storm	Directional	3"	Standard	200	9.01
229-7910	Mini-Storm	Roto	3"	Standard	200	12.10
229-7940	Mini-Storm	Twin Roto	3"	Standard	200	12.10
229-7810	Mini-Storm	Massage	3"	Standard	200	13.39
229-8350	Mini-Storm	Galaxy	3"	Standard	200	9.01
229-8380	Mini-Storm	Multi-Massage	3"	Standard	200	9.01
229-8040	Poly Storm	Directional	3 ⅜"	Standard	120	11.85
229-8000	Poly Storm	Roto	3 ⅜"	Standard	120	14.94
229-8130	Poly Storm	Twin Roto	3 ⅜"	Standard	130	14.94
229-8020	Poly Storm	Massage	3 ⅜"	Standard	120	17.00
229-8180	Poly Storm	Galaxy	3 ⅜"	Standard	120	11.85
229-8520	Poly Storm	Galaxy Massage	3 ⅜"	Standard	130	14.94
229-8280	Poly Storm	Multi-Massage	3 ⅜"	Standard	130	11.85
229-6640	Power Storm	Directional	5"	Standard	50	14.94
229-6660	Power Storm	Twirl	5"	Standard	50	14.94
229-6630	Power Storm	Roto	5"	Standard	50	19.57
229-6610	Power Storm	Twin Roto	5"	Standard	50	19.57
229-6650	Power Storm	Massage	5"	Standard	50	23.69
229-7500	Power Storm	Multi-Massage	5"	Standard	50	14.94
229-1950	Power Storm	Rifled	5"	Standard	50	14.94
224-2100	Mega Storm	Turbulator	6 ⅛"	Standard	20	30.90
224-2160	Mega Storm	Thruster	6 ⅛"	Standard	20	28.84
224-2130	Mega Storm	Twirl	6 ⅛"	Standard	20	27.81

***Note**: All part numbers are for the new thread-in style jets. To order a snap-in style jet, change the part number prefix to 212-xxxx.*

NEW
Thread-In Style Jets

Cluster Storm
Directional

Mini-Storm
Large Face
Galaxy

Poly Storm
Large Face
Multi-Massage

Power Storm
Massage
Pat. #5,920,925

Storm Jets - Smooth Stainless Steel

Part No.	Jet Type	Eyeball	Size	Style	Case Qty.	List (US $)
229-1500S	Adj. Cluster Storm	Directional	2 ¼"	Stainless Steel	200	9.27
229-1520S	Adj. Cluster Storm	Pulsator	2 ¼"	Stainless Steel	200	10.56
229-0100S	Adj. Cluster Storm	Rifled	2 ¼"	Stainless Steel	200	9.27
229-9700S	Adj. Cluster Storm	Shower	2 ¼"	Stainless Steel	200	9.27
229-3800S	Adj. Cluster Storm	Shower - 100% Shut-Off	2 ¼"	Stainless Steel	200	10.56
229-7920S	Mini-Storm	Directional	3"	Stainless Steel	180	17.00
229-7820S	Mini-Storm	Directional	3 5⁄16"	Large Face - Stainless Steel	120	17.51
229-7930S	Mini-Storm	Roto	3"	Stainless Steel	180	20.09
229-7830S	Mini-Storm	Roto	3 5⁄16"	Large Face - Stainless Steel	120	20.60
229-7950S	Mini-Storm	Twin Roto	3"	Stainless Steel	180	20.09
229-7840S	Mini-Storm	Twin Roto	3 5⁄16"	Large Face - Stainless Steel	120	20.60
229-7800S	Mini-Storm	Massage	3"	Stainless Steel	180	21.37
229-7850S	Mini-Storm	Massage	3 5⁄16"	Large Face - Stainless Steel	120	21.89
229-8330S	Mini-Storm	Galaxy	3"	Stainless Steel	180	17.00
229-8310S	Mini-Storm	Galaxy	3 5⁄16"	Large Face - Stainless Steel	120	17.51
229-8370S	Mini-Storm	Multi-Massage	3"	Stainless Steel	180	17.00
229-8390S	Mini-Storm	Multi-Massage	3 5⁄16"	Large Face - Stainless Steel	120	17.51

Directional / Twirl
(Steady Stream / Stationary Eyeball)

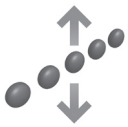

Roto
(Adjustable Rotating Stream)

Twin Roto
(Rotating Dual Stream)

Massage
(Pulsating Stream)

Galaxy
(Gentle Shower)

Multi-Massage
(Multi-Shower)

Rifled
(Enhanced Steady Stream)

Storm Jets - Smooth Stainless Steel

Part No.	Jet Type	Eyeball	Size	Style	Case Qty.	List (US $)
229-8050S	Poly Storm	Directional	3 ⅜"	Stainless Steel	100	23.43
229-8160S	Poly Storm	Directional	4"	Large Face - Stainless Steel	60	24.21
229-8010S	Poly Storm	Roto	3 ⅜"	Stainless Steel	100	26.52
229-8140S	Poly Storm	Roto	4"	Large Face - Stainless Steel	100	27.30
229-8120S	Poly Storm	Twin Roto	3 ⅜"	Stainless Steel	100	26.52
229-8170S	Poly Storm	Twin Roto	4"	Large Face - Stainless Steel	60	27.30
229-8030S	Poly Storm	Massage	3 ⅜"	Stainless Steel	100	28.58
229-8150S	Poly Storm	Massage	4"	Large Face - Stainless Steel	60	29.36
229-8190S	Poly Storm	Galaxy	3 ⅜"	Stainless Steel	100	23.43
229-8060S	Poly Storm	Galaxy	4"	Large Face - Stainless Steel	60	24.21
229-8530S	Poly Storm	Galaxy Massage	3 ⅜"	Stainless Steel	100	28.58
229-8540S	Poly Storm	Galaxy Massage	4"	Large Face - Stainless Steel	60	29.36
229-8270S	Poly Storm	Multi-Massage	3 ⅜"	Stainless Steel	100	23.43
229-8290S	Poly Storm	Multi-Massage	4"	Large Face - Stainless Steel	60	24.21
229-7630S	Power Storm	Directional	5"	Stainless Steel	50	28.33
229-7300S	Power Storm	Directional	5 ½"	Large Face - Stainless Steel	35	29.36
229-7370S	Power Storm	Directional	6 ½"	Extra Large Face - Stainless Steel	25	31.42
229-7640S	Power Storm	Twirl	5"	Stainless Steel	50	28.33
229-7280S	Power Storm	Twirl	5 ½"	Large Face - Stainless Steel	35	29.36
229-7430S	Power Storm	Twirl	6 ½"	Extra Large Face - Stainless Steel	25	31.42
229-7600S	Power Storm	Roto	5"	Stainless Steel	50	32.96
229-7310S	Power Storm	Roto	5 ½"	Large Face - Stainless Steel	35	33.99
229-7380S	Power Storm	Roto	6 ½"	Extra Large Face - Stainless Steel	25	36.05
229-7610S	Power Storm	Twin Roto	5"	Stainless Steel	50	32.96
229-7320S	Power Storm	Twin Roto	5 ½"	Large Face - Stainless Steel	35	33.99
229-7390S	Power Storm	Twin Roto	6 ½"	Extra Large Face - Stainless Steel	25	36.05
229-7740S	Power Storm	Massage	5"	Stainless Steel	50	37.08
229-7360S	Power Storm	Massage	5 ½"	Large Face - Stainless Steel	35	38.11
229-7480S	Power Storm	Massage	6 ½"	Extra Large Face - Stainless Steel	25	40.17
229-7510S	Power Storm	Multi-Massage	5"	Stainless Steel	50	28.33
229-7330S	Power Storm	Multi-Massage	5 ½"	Large Face - Stainless Steel	35	29.36
229-7450S	Power Storm	Multi-Massage	6 ½"	Extra Large Face - Stainless Steel	25	31.42
229-1950S	Power Storm	Rifled	5"	Stainless Steel	50	28.33
224-2100S	Mega Storm	Turbulator	6 ⅛"	Stainless Steel	20	39.14
224-2160S	Mega Storm	Thruster	6 ⅛"	Stainless Steel	20	37.08
224-2130S	Mega Storm	Twirl	6 ⅛"	Stainless Steel	20	36.05

***Note**: All part numbers are for the new thread-in style jets. To order a snap-in style jet, change the part number prefix to 212-xxxx.*

NEW
Thread-In Style Jets

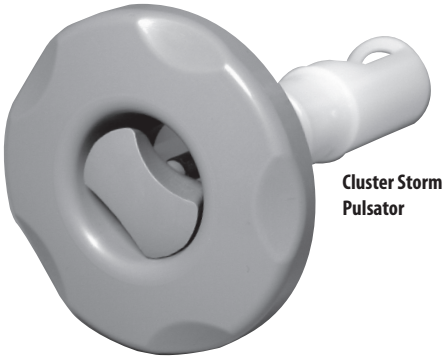

Cluster Storm Pulsator

Mini-Storm Large Face Galaxy

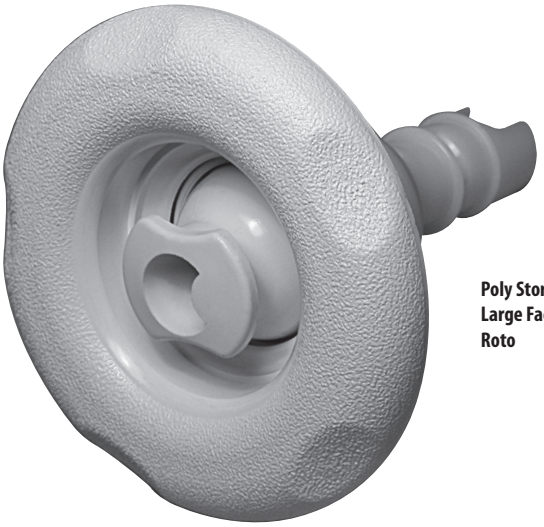

Poly Storm Large Face Roto

Power Storm Massage

Pat. #5,920,925

Directional / Twirl
(Steady Stream / Stationary Eyeball)

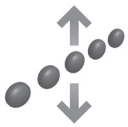

Roto
(Adjustable Rotating Stream)

Twin Roto
(Rotating Dual Stream)

Massage
(Pulsating Stream)

Galaxy
(Gentle Shower)

Multi-Massage
(Multi-Shower)

Rifled
(Enhanced Steady Stream)

Twister
(Adjustable Rotating Stream)

Acupressure
(Pressure Ball)

Storm Jets - 5-Scallop

Part No.	Jet Type	Eyeball	Size	Style	Case Qty.	List (US $)
229-1500	Adj. Cluster Storm	Directional	2 ¼"	Smooth	300	3.61
229-1540	Adj. Cluster Storm	Directional	2 ¼"	Textured	300	3.61
229-1520	Adj. Cluster Storm	Pulsator	2 ¼"	Smooth	300	4.89
229-1590	Adj. Cluster Storm	Pulsator	2 ¼"	Textured	300	4.89
229-9710	Adj. Cluster Storm	Shower	2 ¼"	Smooth	300	3.61
229-9720	Adj. Cluster Storm	Shower	2 ¼"	Textured	300	3.61
229-3010	Adj. Cluster Storm	Shower - 100% Shut-Off	2 ¼"	Smooth	300	4.64
229-7920	Mini-Storm	Directional	3"	Smooth	250	9.01
229-7820	Mini-Storm	Directional	3 5⁄16"	Large Face - Smooth	200	9.01
229-7930	Mini-Storm	Roto	3"	Smooth	250	12.10
229-7830	Mini-Storm	Roto	3 5⁄16"	Large Face - Textured	200	12.10
229-7950	Mini-Storm	Twin Roto	3"	Smooth	250	12.10
229-7840	Mini-Storm	Twin Roto	3 5⁄16"	Large Face - Smooth	200	12.10
229-7800	Mini-Storm	Massage	3"	Smooth	250	13.99
229-7850	Mini-Storm	Massage	3 5⁄16"	Large Face - Textured	200	13.39
229-8330	Mini-Storm	Galaxy	3"	Smooth	250	9.01
229-8310	Mini-Storm	Galaxy	3 5⁄16"	Large Face - Smooth	200	9.01
229-8370	Mini-Storm	Multi-Massage	3"	Smooth	250	9.01
229-8390	Mini-Storm	Multi-Massage	3 5⁄16"	Large Face - Smooth	200	9.01
229-0160	Mini-Storm	Rifled	3"	Smooth	200	9.01
229-9500	Mini-Storm	Twister	3"	Smooth	200	12.10
229-8050	Poly Storm	Directional	3 3⁄8"	Smooth	130	11.85
229-8160	Poly Storm	Directional	4"	Large Face - Smooth	100	11.85
229-8010	Poly Storm	Roto	3 3⁄8"	Smooth	130	14.94
229-8140	Poly Storm	Roto	4"	Large Face - Smooth	100	14.94
229-8120	Poly Storm	Twin Roto	3 3⁄8"	Smooth	130	14.94
229-8170	Poly Storm	Twin Roto	4"	Large Face - Smooth	130	14.94
229-8030	Poly Storm	Massage	3 3⁄8"	Smooth	130	17.00
229-8150	Poly Storm	Massage	4"	Large Face - Smooth	100	17.00
229-8190	Poly Storm	Galaxy	3 3⁄8"	Smooth	130	11.85
229-8060	Poly Storm	Galaxy	4"	Large Face - Smooth	100	11.85
229-8530	Poly Storm	Galaxy Massage	3 3⁄8"	Smooth	130	17.00
229-8540	Poly Storm	Galaxy Massage	4"	Large Face - Smooth	100	17.00
229-8270	Poly Storm	Multi-Massage	3 3⁄8"	Smooth	130	11.85
229-8290	Poly Storm	Multi-Massage	4"	Large Face - Smooth	100	11.85
229-9600	Poly Storm	Twister	3 3⁄8"	Smooth	100	14.94
229-7630	Power Storm	Directional	5"	Smooth	50	14.94
229-7640	Power Storm	Twirl	5"	Smooth	50	14.94
229-7600	Power Storm	Roto	5"	Smooth	50	19.57
229-7610	Power Storm	Twin Roto	5"	Smooth	50	19.57
229-7740	Power Storm	Massage	5"	Smooth	50	23.69
229-7510	Power Storm	Multi-Massage	5"	Smooth	50	14.94
229-1960	Power Storm	Rifled	5"	Smooth	50	14.94

***Note**: All part numbers are for the new thread-in style jets. To order a snap-in style jet, change the part number prefix to 212-xxxx.*

NEW
Thread-In Style Jets

Cluster Storm
Pulsator

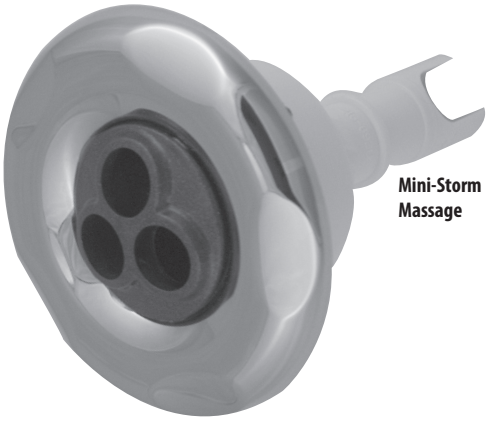

Mini-Storm
Massage

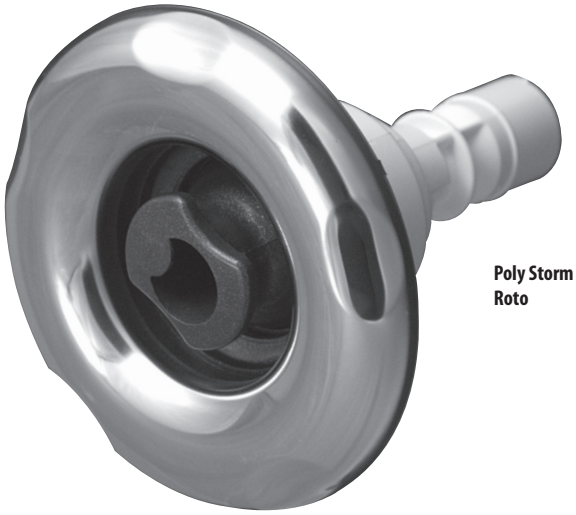

Poly Storm
Roto

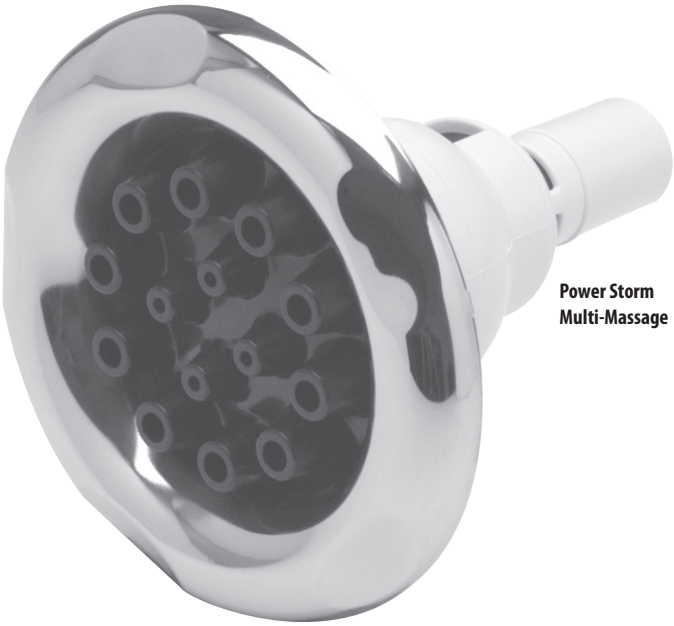

Power Storm
Multi-Massage

Directional / Twirl
(Steady Stream / Stationary Eyeball)

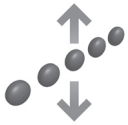

Roto
(Adjustable Rotating Stream)

Twin Roto
(Rotating Dual Stream)

Massage
(Pulsating Stream)

Galaxy
(Gentle Shower)

Multi-Massage
(Multi-Shower)

Rifled
(Enhanced Steady Stream)

Twister
(Adjustable Rotating Stream)

Acupressure
(Pressure Ball)

Storm Jets - 5-Scallop Stainless Steel

Part No.	Jet Type	Eyeball	Size	Style	Case Qty.	List (US $)
229-5310	Adj. Cluster Storm	Directional	2 ¼"	Stainless Steel	45	9.27
229-5320	Adj. Cluster Storm	Pulsator	2 ¼"	Stainless Steel	45	10.56
229-0110S	Adj. Cluster Storm	Rifled	2 ¼"	Stainless Steel	45	9.27
229-9720S	Adj. Cluster Storm	Shower	2 ¼"	Stainless Steel	45	9.27
229-5410S	Mini-Storm	Directional	3"	Stainless Steel	45	17.00
229-5420S	Mini-Storm	Roto	3"	Stainless Steel	45	20.09
229-5430S	Mini-Storm	Twin Roto	3"	Stainless Steel	45	20.09
229-5440S	Mini-Storm	Massage	3"	Stainless Steel	45	21.37
229-5450S	Mini-Storm	Galaxy	3"	Stainless Steel	250	9.27
229-8310S	Mini-Storm	Galaxy	3 5⁄16"	Large Face - Stainless Steel	120	9.79
229-5480S	Mini-Storm	Multi-Massage	3"	Stainless Steel	45	9.27
229-9500S	Mini-Storm	Twister	3"	Stainless Steel	45	20.09
229-5510S	Poly Storm	Directional	4"	Large Face - Stainless Steel	45	24.21
229-5520S	Poly Storm	Roto	4"	Large Face - Stainless Steel	45	27.30
229-5530S	Poly Storm	Twin Roto	4"	Large Face - Stainless Steel	45	27.30
229-5540S	Poly Storm	Massage	4"	Large Face - Stainless Steel	45	29.36
229-5550S	Poly Storm	Galaxy	4"	Large Face - Stainless Steel	45	24.21
229-5560S	Poly Storm	Galaxy Massage	4"	Large Face - Stainless Steel	45	29.36
229-5580S	Poly Storm	Multi-Massage	4"	Large Face - Stainless Steel	45	24.21
229-9600S	Poly Storm	Twister	4"	Stainless Steel	45	27.30
229-5610S	Power Storm	Directional	5"	Stainless Steel	50	28.33
229-5620S	Power Storm	Twirl	5"	Stainless Steel	50	28.33
229-5630S	Power Storm	Roto	5"	Stainless Steel	50	32.96
229-5640S	Power Storm	Twin Roto	5"	Stainless Steel	50	32.96
229-5650S	Power Storm	Massage	5"	Stainless Steel	50	37.08
229-5690S	Power Storm	Multi-Massage	5"	Stainless Steel	50	28.33

***Note**: All part numbers are for the new thread-in style jets. To order a snap-in style jet, change the part number prefix to 212-xxxx.*

NEW
Thread-In Style Jets

Cluster Storm Shower

Mini-Storm Rifled

Pat. #D,574,964 S

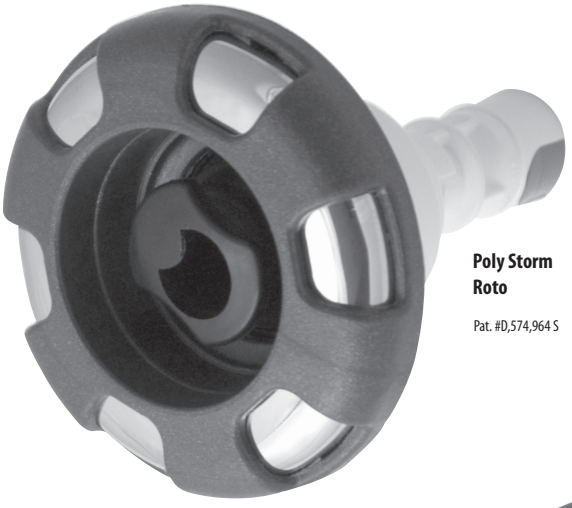

Poly Storm Roto

Pat. #D,574,964 S

Power Storm Twister

Pat. #D,574,964 S

Mega Storm Turbulator

Pat. #D,574,964;
Patented Design
Pat. # TBA

Directional / Twirl
(Steady Stream / Stationary Eyeball)

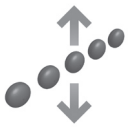

Roto
(Adjustable Rotating Stream)

Twin Roto
(Rotating Dual Stream)

Massage
(Pulsating Stream)

Galaxy
(Gentle Shower)

Multi-Massage
(Multi-Shower)

Rifled
(Enhanced Steady Stream)

Twister
(Adjustable Rotating Stream)

Acupressure
(Pressure Ball)

Storm Jets - 6-Spoke

Part No.	Jet Type	Eyeball	Size	Style	Case Qty.	List (US $)
229-1470S	Adj. Cluster Storm	Directional	2 ¼"	Plastic / Stainless Steel	200	9.27
226-1470S	Adj. Cluster Storm	Directional - 100% Shut-Off	2 ¼"	Plastic / Stainless Steel	200	10.56
229-1440S	Adj. Cluster Storm	Pulsator	2 ¼"	Plastic / Stainless Steel	200	10.56
226-1440S	Adj. Cluster Storm	Pulsator - 100% Shut-Off	2 ¼"	Plastic / Stainless Steel	200	11.85
229-0130S	Adj. Cluster Storm	Rifled	2 ¼"	Plastic / Stainless Steel	200	9.27
226-0130S	Adj. Cluster Storm	Rifled - 100% Shut-Off	2 ¼"	Plastic / Stainless Steel	200	10.56
229-1770S	Adj. Cluster Storm	Shower	2 ¼"	Plastic / Stainless Steel	200	9.27
229-3830S	Adj. Cluster Storm	Shower - 100% Shut-Off	2 ¼"	Plastic / Stainless Steel	200	10.56
229-8630S	Mini-Storm	Directional	3 5⁄16"	Plastic / Stainless Steel	180	17.00
229-8640S	Mini-Storm	Roto	3 5⁄16"	Plastic / Stainless Steel	200	20.09
229-8650S	Mini-Storm	Twin Roto	3 5⁄16"	Plastic / Stainless Steel	200	20.09
229-8660S	Mini-Storm	Massage	3 5⁄16"	Plastic / Stainless Steel	200	21.37
229-8670S	Mini-Storm	Galaxy	3 5⁄16"	Plastic / Stainless Steel	200	17.00
229-8700S	Mini-Storm	Multi-Massage	3 5⁄16"	Plastic / Stainless Steel	200	17.00
229-0180S	Mini-Storm	Rifled	3 5⁄16"	Plastic / Stainless Steel	180	17.00
229-9520S	Mini-Storm	Twister	3 5⁄16"	Plastic / Stainless Steel	180	20.09
229-8590S	Poly Storm	Directional	3 ⅝"	Plastic / Stainless Steel	100	24.21
229-8570S	Poly Storm	Roto	3 ⅝"	Plastic / Stainless Steel	100	27.30
229-8580S	Poly Storm	Twin Roto	3 ⅝"	Plastic / Stainless Steel	100	22.30
229-3200S	Poly Storm	Massage	3 ⅝"	Plastic / Stainless Steel	100	29.36
229-3210S	Poly Storm	Galaxy	3 ⅝"	Plastic / Stainless Steel	100	24.21
229-3220S	Poly Storm	Galaxy Massage	3 ⅝"	Plastic / Stainless Steel	100	29.36
229-3240S	Poly Storm	Multi-Massage	3 ⅝"	Plastic / Stainless Steel	100	24.21
224-5710	Poly Storm	Acupressure	3 ⅝"	Plastic / Stainless Steel	65	27.30
229-1930S	Poly Storm	Rifled	3 ⅝"	Plastic / Stainless Steel	100	24.21
229-9620	Poly Storm	Twister	3 ⅝"	Plastic / Stainless Steel	100	27.30
229-7570S	Power Storm	Directional	5 ¼"	Plastic / Stainless Steel	45	28.33
229-7580S	Power Storm	Twirl	5 ¼"	Plastic / Stainless Steel	45	28.33
229-7550S	Power Storm	Roto	5 ¼"	Plastic / Stainless Steel	45	32.96
229-7560S	Power Storm	Twin Roto	5 ¼"	Plastic / Stainless Steel	45	32.96
229-7590S	Power Storm	Massage	5 ¼"	Plastic / Stainless Steel	45	37.08
229-7250S	Power Storm	Multi-Massage	5 ¼"	Plastic / Stainless Steel	45	28.33
224-6700S	Power Storm	Acupressure	5 ¼"	Plastic / Stainless Steel	45	32.96
229-7700S	Power Storm	Twister	5 ¼"	Plastic / Stainless Steel	45	32.96
229-1980S	Power Storm	Rifled	5 ¼"	Plastic / Stainless Steel	45	28.33
224-2110S	Mega Storm	Turbulator	6 ⅛"	Plastic / Stainless Steel	20	39.14
224-2170S	Mega Storm	Thruster	6 ⅛"	Plastic / Stainless Steel	20	37.08
224-2140S	Mega Storm	Twirl	6 ⅛"	Plastic / Stainless Steel	20	36.05

All 6-Spoke Storm Jets are available as Plastic / Stainless Steel or Two-Tone Plastic. Please call for Two-Tone Plastic part numbers and colors.

***Note**: All part numbers are for the new thread-in style jets. To order a snap-in style jet, change the part number prefix to 212-xxxx.*

NEW
Thread-In Style Jets

Cluster Storm Shower

Pat. #D591,863 S

Mini-Storm Multi-Massage

Pat. #D591,863 S

Poly Storm Acupressure

Pat. #5,920,925
Pat. #D591,863 S

Power Storm Rifled

Pat. #D591,863 S

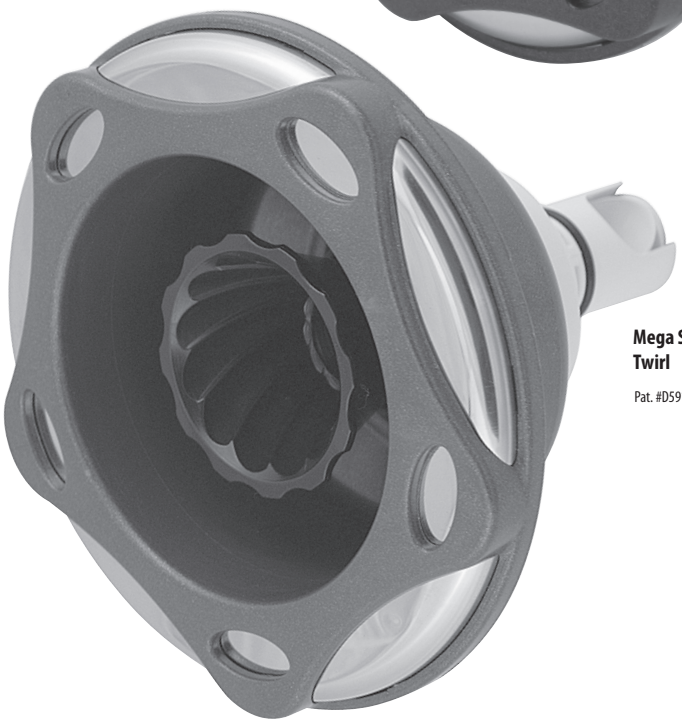

Mega Storm Twirl

Pat. #D591,863 S

Directional / Twirl
(Steady Stream / Stationary Eyeball)

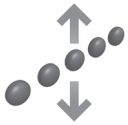

Roto
(Adjustable Rotating Stream)

Twin Roto
(Rotating Dual Stream)

Massage
(Pulsating Stream)

Galaxy
(Gentle Shower)

Multi-Massage
(Multi-Shower)

Rifled
(Enhanced Steady Stream)

Twister
(Adjustable Rotating Stream)

Acupressure
(Pressure Ball)

Storm Jets - Revo

Part No.	Jet Type	Eyeball	Size	Style	Case Qty.	List (US $)
229-1460S	Adj. Cluster Storm	Directional	2 ¼"	Plastic / Stainless Steel	200	9.27
226-1460S	Adj. Cluster Storm	Directional - 100% Shut-Off	2 ¼"	Plastic / Stainless Steel	200	10.56
229-1430S	Adj. Cluster Storm	Pulsator	2 ¼"	Plastic / Stainless Steel	200	10.56
226-1430S	Adj. Cluster Storm	Pulsator - 100% Shut-Off	2 ¼"	Plastic / Stainless Steel	200	11.85
229-0120S	Adj. Cluster Storm	Rifled	2 ¼"	Plastic / Stainless Steel	200	9.27
226-0120S	Adj. Cluster Storm	Rifled - 100% Shut-Off	2 ¼"	Plastic / Stainless Steel	200	10.56
229-9730S	Adj. Cluster Storm	Shower	2 ¼"	Plastic / Stainless Steel	200	9.27
229-8790S	Mini-Storm	Directional	3 5⁄16"	Plastic / Stainless Steel	200	17.00
229-8850S	Mini-Storm	Roto	3 5⁄16"	Plastic / Stainless Steel	200	20.09
229-8860S	Mini-Storm	Twin Roto	3 5⁄16"	Plastic / Stainless Steel	200	20.09
229-8870S	Mini-Storm	Massage	3 5⁄16"	Plastic / Stainless Steel	200	21.37
229-8880S	Mini-Storm	Galaxy	3 5⁄16"	Plastic / Stainless Steel	200	17.00
229-9020S	Mini-Storm	Multi-Massage	3 5⁄16"	Plastic / Stainless Steel	200	17.00
229-0170S	Mini-Storm	Rifled	3 5⁄16"	Plastic / Stainless Steel	180	17.00
229-9510S	Mini-Storm	Twister	3 5⁄16"	Plastic / Stainless Steel	180	20.09
229-3250S	Poly Storm	Directional	3 5⁄8"	Plastic / Stainless Steel	100	24.21
229-3260S	Poly Storm	Roto	3 5⁄8"	Plastic / Stainless Steel	100	27.30
229-3270S	Poly Storm	Twin Roto	3 5⁄8"	Plastic / Stainless Steel	100	27.30
229-3280S	Poly Storm	Massage	3 5⁄8"	Plastic / Stainless Steel	100	29.36
229-3290S	Poly Storm	Galaxy	3 5⁄8"	Plastic / Stainless Steel	100	24.21
229-3600S	Poly Storm	Galaxy Massage	3 5⁄8"	Plastic / Stainless Steel	100	29.36
229-3620S	Poly Storm	Multi-Massage	3 5⁄8"	Plastic / Stainless Steel	100	24.21
224-5700	Poly Storm	Acupressure	3 5⁄8"	Plastic / Stainless Steel	65	27.30
229-1920S	Poly Storm	Rifled	3 5⁄8"	Plastic / Stainless Steel	100	24.21
229-9610S	Poly Storm	Twister	3 5⁄8"	Plastic / Stainless Steel	100	27.30
229-7120S	Power Storm	Directional	5 ¼"	Plastic / Stainless Steel	45	28.33
229-7130S	Power Storm	Twirl	5 ¼"	Plastic / Stainless Steel	45	28.33
229-7140S	Power Storm	Roto	5 ¼"	Plastic / Stainless Steel	45	32.96
229-7150S	Power Storm	Twin Roto	5 ¼"	Plastic / Stainless Steel	45	32.96
229-7160S	Power Storm	Massage	5 ¼"	Plastic / Stainless Steel	45	37.08
229-7090S	Power Storm	Multi-Massage	5 ¼"	Plastic / Stainless Steel	45	28.33
224-6710S	Power Storm	Acupressure	5 ¼"	Plastic / Stainless Steel	45	32.96
229-7690S	Power Storm	Twister	5 ¼"	Plastic / Stainless Steel	45	32.96
229-1970S	Power Storm	Rifled	5 ¼"	Plastic / Stainless Steel	45	28.33
224-2120S	Mega Storm	Turbulator	6 ⅛"	Plastic / Stainless Steel	20	39.14
224-2180S	Mega Storm	Thruster	6 ⅛"	Plastic / Stainless Steel	20	37.08
224-2150S	Mega Storm	Twirl	6 ⅛"	Plastic / Stainless Steel	20	36.05

All Revo Storm Jets are available as Plastic / Stainless Steel or Two-Tone Plastic. Please call for Two-Tone Plastic part numbers and colors.

***Note**: All part numbers are for the new thread-in style jets. To order a snap-in style jet, change the part number prefix to 212-xxxx.*

NEW
Thread-In Style Jets

Cluster Storm Large Face Rifled

Pat. #D,574,501 S

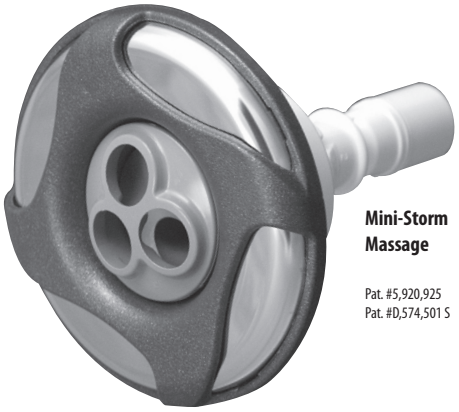

Mini-Storm Massage

Pat. #5,920,925
Pat. #D,574,501 S

Poly Storm Massage

Pat. #5,920,925
Pat. #D,574,501 S

Power Storm Acupressure

Pat. #D,574,501 S

Storm Jets - Swirl						
Part No.	Jet Type	Eyeball	Size	Style	Case Qty.	List (US $)
229-1670S	Adj. Cluster Storm	Directional	2 ¼"	Plastic / Stainless Steel	200	9.27
226-1670S	Adj. Cluster Storm	Directional - 100% Shut-Off	2 ¼"	Plastic / Stainless Steel	200	10.56
229-0210S	Adj. Cluster Storm	Directional	3 5⁄16"	Large Face - Stainless Steel	200	14.42
229-1780S	Adj. Cluster Storm	Pulsator	2 ¼"	Plastic / Stainless Steel	200	10.56
226-1780S	Adj. Cluster Storm	Pulsator - 100% Shut-Off	2 ¼"	Plastic / Stainless Steel	200	11.85
229-0220S	Adj. Cluster Storm	Pulsator	3 5⁄16"	Large Face - Stainless Steel	200	15.71
229-0140S	Adj. Cluster Storm	Rifled	2 ¼"	Plastic / Stainless Steel	200	9.27
226-0140S	Adj. Cluster Storm	Rifled - 100% Shut-Off	2 ¼"	Plastic / Stainless Steel	200	10.56
229-0230S	Adj. Cluster Storm	Rifled	3 5⁄16"	Large Face - Stainless Steel	200	14.42
229-1790S	Adj. Cluster Storm	Shower	2 ¼"	Plastic / Stainless Steel	200	9.27
229-0300S	Adj. Cluster Storm	Shower - 100% Shut-Off	2 ¼"	Plastic / Stainless Steel	200	10.56
229-0240S	Adj. Cluster Storm	Shower	3 5⁄16"	Large Face - Stainless Steel	200	14.42

Directional / Twirl
(Steady Stream / Stationary Eyeball)

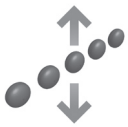

Roto
(Adjustable Rotating Stream)

Twin Roto
(Rotating Dual Stream)

Massage
(Pulsating Stream)

Galaxy
(Gentle Shower)

Multi-Massage
(Multi-Shower)

Rifled
(Enhanced Steady Stream)

Twister
(Adjustable Rotating Stream)

Acupressure
(Pressure Ball)

Storm Jets - Swirl

Part No.	Jet Type	Eyeball	Size	Style	Case Qty.	List (US $)
229-8440S	Mini-Storm	Directional	3 5⁄16"	Plastic / Stainless Steel	200	17.00
229-8470S	Mini-Storm	Roto	3 5⁄16"	Plastic / Stainless Steel	200	20.09
229-8450S	Mini-Storm	Twin Roto	3 5⁄16"	Plastic / Stainless Steel	200	20.09
229-8460S	Mini-Storm	Massage	3 5⁄16"	Plastic / Stainless Steel	200	21.37
229-9050S	Mini-Storm	Galaxy	3 5⁄16"	Plastic / Stainless Steel	200	17.00
229-9040S	Mini-Storm	Multi-Massage	3 5⁄16"	Plastic / Stainless Steel	200	17.00
229-0190S	Mini-Storm	Rifled	3 5⁄16"	Plastic / Stainless Steel	180	17.00
229-9530S	Mini-Storm	Twister	3 5⁄16"	Plastic / Stainless Steel	180	20.09
229-4020S	Poly Storm	Directional	3 5⁄8"	Plastic / Stainless Steel	100	24.21
229-0440S	Poly Storm	Directional	4 3⁄8"	Large Face - Stainless Steel	70	26.27
229-4030S	Poly Storm	Roto	3 5⁄8"	Plastic / Stainless Steel	100	27.30
229-0450S	Poly Storm	Roto	4 3⁄8"	Large Face - Stainless Steel	70	29.36
229-4040S	Poly Storm	Twin Roto	3 5⁄8"	Plastic / Stainless Steel	100	27.30
229-0460S	Poly Storm	Twin Roto	4 3⁄8"	Large Face - Stainless Steel	70	29.36
229-4050S	Poly Storm	Massage	3 5⁄8"	Plastic / Stainless Steel	100	29.36
229-0620S	Poly Storm	Massage	4 3⁄8"	Large Face - Stainless Steel	70	31.42
229-4060S	Poly Storm	Galaxy	3 5⁄8"	Plastic / Stainless Steel	100	24.21
229-0470S	Poly Storm	Galaxy	4 3⁄8"	Large Face - Stainless Steel	70	26.27
229-4070S	Poly Storm	Galaxy Massage	3 5⁄8"	Plastic / Stainless Steel	100	29.50
229-4090S	Poly Storm	Multi-Massage	3 5⁄8"	Plastic / Stainless Steel	100	24.21
229-0480S	Poly Storm	Multi-Massage	4 3⁄8"	Large Face - Stainless Steel	70	26.27
229-5720S	Poly Storm	Acupressure	3 5⁄8"	Plastic / Stainless Steel	65	27.30
229-0490S	Poly Storm	Acupressure	4 3⁄8"	Large Face - Stainless Steel	70	29.36
229-1940S	Poly Storm	Rifled	3 5⁄8"	Plastic / Stainless Steel	100	24.21
229-0610S	Poly Storm	Rifled	4 3⁄8"	Large Face - Stainless Steel	70	26.27
229-9630S	Poly Storm	Twister	3 5⁄8"	Plastic / Stainless Steel	100	27.30
229-0410S	Poly Storm	Twister	4 3⁄8"	Large Face - Stainless Steel	70	29.36
229-6340S	Power Storm	Directional	5 1⁄4"	Plastic / Stainless Steel	45	28.33
229-6180S	Power Storm	Twirl	5 1⁄4"	Plastic / Stainless Steel	45	28.33
229-6380S	Power Storm	Roto	5 1⁄4"	Plastic / Stainless Steel	45	32.96
229-6360S	Power Storm	Twin Roto	5 1⁄4"	Plastic / Stainless Steel	45	32.96
229-6350S	Power Storm	Massage	5 1⁄4"	Plastic / Stainless Steel	45	37.08
229-6170S	Power Storm	Multi-Massage	5 1⁄4"	Plastic / Stainless Steel	45	28.33
229-6700S	Power Storm	Acupressure	5 1⁄4"	Plastic / Stainless Steel	45	32.96
229-7680S	Power Storm	Twister	5 1⁄4"	Plastic / Stainless Steel	45	32.96
229-1990S	Power Storm	Rifled	5 1⁄4"	Plastic / Stainless Steel	45	28.33

All Swirl Storm Jets are available as Plastic / Stainless Steel or Two-Tone Plastic. Please call for Two-Tone Plastic part numbers and colors.

***Note**: All part numbers are for the new thread-in style jets. To order a snap-in style jet, change the part number prefix to 212-xxxx.*

NEW
Thread-In Style Jets

Cluster Storm Directional

Pat. #D,574,501 S

Mini-Storm Twin Roto

Pat. #D,574,501 S

Poly Storm Twin Roto

Pat. #D,574,501 S

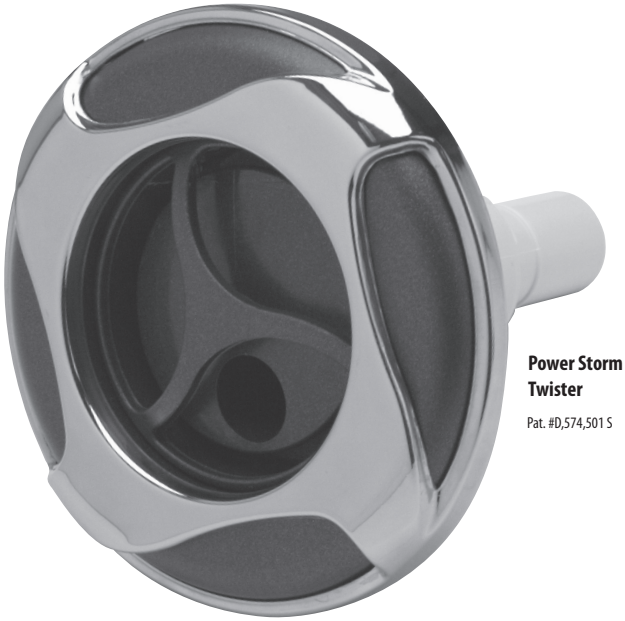

Power Storm Twister

Pat. #D,574,501 S

Storm Jets - Reverse Swirl						
Part No.	Jet Type	Eyeball	Size	Style	Case Qty.	List (US $)
229-2700S	Adj. Cluster Storm	Directional	2 ¼"	Stainless Steel / Plastic	200	9.27
229-3300S	Adj. Cluster Storm	Directional - 100% Shut-Off	2 ¼"	Stainless Steel / Plastic	200	10.56
229-2740S	Adj. Cluster Storm	Directional	3 5⁄16"	Large Face - Stainless Steel	200	14.42
229-2720S	Adj. Cluster Storm	Pulsator	2 ¼"	Stainless Steel / Plastic	200	10.56
229-3310S	Adj. Cluster Storm	Pulsator - 100% Shut-Off	2 ¼"	Stainless Steel / Plastic	200	11.85
229-2760S	Adj. Cluster Storm	Pulsator	3 5⁄16"	Large Face - Stainless Steel	200	15.71
229-2710S	Adj. Cluster Storm	Rifled	2 ¼"	Stainless Steel / Plastic	200	9.27
229-3320S	Adj. Cluster Storm	Rifled - 100% Shut-Off	2 ¼"	Stainless Steel / Plastic	200	10.56
229-2750S	Adj. Cluster Storm	Rifled	3 5⁄16"	Large Face - Stainless Steel	200	14.42
229-2730S	Adj. Cluster Storm	Shower	2 ¼"	Stainless Steel / Plastic	200	9.27
229-3330S	Adj. Cluster Storm	Shower - 100% Shut-Off	2 ¼"	Stainless Steel / Plastic	200	10.56
229-2770S	Adj. Cluster Storm	Shower	3 5⁄16"	Large Face - Stainless Steel	200	14.42

Directional / Twirl
(Steady Stream / Stationary Eyeball)

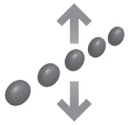

Roto
(Adjustable Rotating Stream)

Twin Roto
(Rotating Dual Stream)

Massage
(Pulsating Stream)

Galaxy
(Gentle Shower)

Multi-Massage
(Multi-Shower)

Rifled
(Enhanced Steady Stream)

Twister
(Adjustable Rotating Stream)

Acupressure
(Pressure Ball)

Storm Jets - Reverse Swirl

Part No.	Jet Type	Eyeball	Size	Style	Case Qty.	List (US $)
229-2400S	Mini-Storm	Directional	3 5⁄16"	Stainless Steel / Plastic	150	17.00
229-2420S	Mini-Storm	Roto	3 5⁄16"	Stainless Steel / Plastic	150	20.09
229-2430S	Mini-Storm	Twin Roto	3 5⁄16"	Stainless Steel / Plastic	150	20.09
229-2440S	Mini-Storm	Massage	3 5⁄16"	Stainless Steel / Plastic	150	21.37
229-2450S	Mini-Storm	Galaxy	3 5⁄16"	Stainless Steel / Plastic	150	17.00
229-2480S	Mini-Storm	Multi-Massage	3 5⁄16"	Stainless Steel / Plastic	150	17.00
229-2410S	Mini-Storm	Rifled	3 5⁄16"	Stainless Steel / Plastic	150	17.00
229-2940S	Mini-Storm	Twister	3 5⁄16"	Stainless Steel / Plastic	150	20.09
229-2800S	Poly Storm	Directional	3 5⁄8"	Stainless Steel / Plastic	100	24.21
229-2500S	Poly Storm	Directional	4 3⁄8"	Large Face - Stainless Steel	70	26.27
229-2820S	Poly Storm	Roto	3 5⁄8"	Stainless Steel / Plastic	100	27.30
229-2520S	Poly Storm	Roto	4 3⁄8"	Large Face - Stainless Steel	70	29.36
229-2830S	Poly Storm	Twin Roto	3 5⁄8"	Stainless Steel / Plastic	100	27.30
229-2530S	Poly Storm	Twin Roto	4 3⁄8"	Large Face - Stainless Steel	70	29.36
229-2840S	Poly Storm	Massage	3 5⁄8"	Stainless Steel / Plastic	100	29.36
229-2540S	Poly Storm	Massage	4 3⁄8"	Large Face - Stainless Steel	70	31.42
229-2850S	Poly Storm	Galaxy	3 5⁄8"	Stainless Steel / Plastic	100	24.21
229-2550S	Poly Storm	Galaxy	4 3⁄8"	Large Face - Stainless Steel	70	26.27
229-2860S	Poly Storm	Galaxy Massage	3 5⁄8"	Stainless Steel / Plastic	100	29.36
229-2880S	Poly Storm	Multi-Massage	3 5⁄8"	Stainless Steel / Plastic	100	24.21
229-2580S	Poly Storm	Multi-Massage	4 3⁄8"	Large Face - Stainless Steel	70	26.27
229-2890S	Poly Storm	Acupressure	3 5⁄8"	Stainless Steel / Plastic	100	27.30
229-2590S	Poly Storm	Acupressure	4 3⁄8"	Large Face - Stainless Steel	70	29.36
229-2810S	Poly Storm	Rifled	3 5⁄8"	Stainless Steel / Plastic	100	24.21
229-2510S	Poly Storm	Rifled	4 3⁄8"	Large Face - Stainless Steel	70	26.27
229-2950S	Poly Storm	Twister	3 5⁄8"	Stainless Steel / Plastic	100	27.30
229-2960S	Poly Storm	Twister	4 3⁄8"	Large Face - Stainless Steel	70	29.36
229-2600S	Power Storm	Directional	5 1⁄4"	Stainless Steel / Plastic	45	28.33
229-2610S	Power Storm	Twirl	5 1⁄4"	Stainless Steel / Plastic	45	28.33
229-2630S	Power Storm	Roto	5 1⁄4"	Stainless Steel / Plastic	45	32.96
229-2640S	Power Storm	Twin Roto	5 1⁄4"	Stainless Steel / Plastic	45	32.96
229-2650S	Power Storm	Massage	5 1⁄4"	Stainless Steel / Plastic	45	37.08
229-2690S	Power Storm	Multi-Massage	5 1⁄4"	Stainless Steel / Plastic	45	28.33
229-2780S	Power Storm	Acupressure	5 1⁄4"	Stainless Steel / Plastic	45	32.96
229-2790S	Power Storm	Twister	5 1⁄4"	Stainless Steel / Plastic	45	32.96
229-2620S	Power Storm	Rifled	5 1⁄4"	Stainless Steel / Plastic	45	28.33

All Reverse Swirl Storm Jets are available as Stainless Steel / Plastic or Two-Tone Plastic. Please call for Two-Tone Plastic part numbers and colors.

***Note**: All part numbers are for the new thread-in style jets. To order a snap-in style jet, change the part number prefix to 212-xxxx.*

NEW
Thread-In Style Jets

Cluster Storm Pulsator

Pat. #D,574,964 S

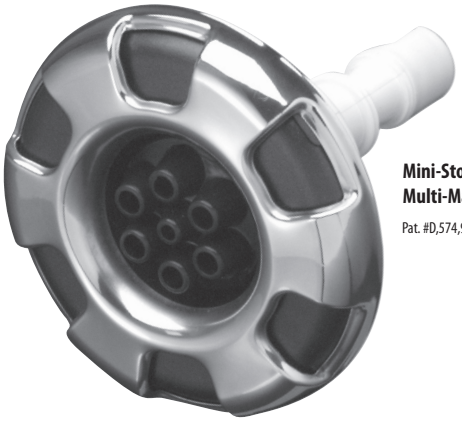

Mini-Storm Multi-Massage

Pat. #D,574,964 S

Poly Storm Directional

Pat. #D,574,964 S

Power Storm Massage

Pat. #D,574,964 S;
Pat. #5,920,925

Storm Jets - Nova						
Part No.	Jet Type	Eyeball	Size	Style	Case Qty.	List (US $)
229-9000S	Adj. Cluster Storm	Directional	2 ¼"	Stainless Steel / Plastic	200	9.27
229-9050S	Adj. Cluster Storm	Directional - 100% Shut-Off	2 ¼"	Stainless Steel / Plastic	200	10.56
229-9010S	Adj. Cluster Storm	Pulsator	2 ¼"	Stainless Steel / Plastic	200	10.56
229-3400S	Adj. Cluster Storm	Pulsator - 100% Shut-Off	2 ¼"	Stainless Steel / Plastic	200	11.85
229-9020S	Adj. Cluster Storm	Rifled	2 ¼"	Stainless Steel / Plastic	200	9.27
229-3410S	Adj. Cluster Storm	Rifled - 100% Shut-Off	2 ¼"	Stainless Steel / Plastic	200	10.56
229-9060S	Adj. Cluster Storm	Shower	2 ¼"	Stainless Steel / Plastic	200	9.27
229-3420S	Adj. Cluster Storm	Shower - 100% Shut-Off	2 ¼"	Stainless Steel / Plastic	200	10.56

Directional / Twirl
(Steady Stream / Stationary Eyeball)

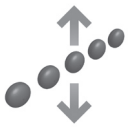

Roto
(Adjustable Rotating Stream)

Twin Roto
(Rotating Dual Stream)

Massage
(Pulsating Stream)

Galaxy
(Gentle Shower)

Multi-Massage
(Multi-Shower)

Rifled
(Enhanced Steady Stream)

Twister
(Adjustable Rotating Stream)

Acupressure
(Pressure Ball)

Storm Jets - Nova

Part No.	Jet Type	Eyeball	Size	Style	Case Qty.	List (US $)
229-9100S	Mini-Storm	Directional	3 5⁄16"	Stainless Steel / Plastic	150	17.00
229-9150S	Mini-Storm	Roto	3 5⁄16"	Stainless Steel / Plastic	150	20.09
229-9130S	Mini-Storm	Twin Roto	3 5⁄16"	Stainless Steel / Plastic	150	20.09
229-9160S	Mini-Storm	Massage	3 5⁄16"	Stainless Steel / Plastic	150	21.37
229-9170S	Mini-Storm	Galaxy	3 5⁄16"	Stainless Steel / Plastic	150	17.00
229-9140S	Mini-Storm	Multi-Massage	3 5⁄16"	Stainless Steel / Plastic	150	17.00
229-9180S	Mini-Storm	Rifled	3 5⁄16"	Stainless Steel / Plastic	150	17.00
229-9190S	Mini-Storm	Twister	3 5⁄16"	Stainless Steel / Plastic	150	20.09
229-9200S	Poly Storm	Directional	3 5⁄8"	Stainless Steel / Plastic	100	24.21
229-9300S	Poly Storm	Directional	4 3⁄8"	Large Face - Stainless Steel	70	26.27
229-9210S	Poly Storm	Roto	3 5⁄8"	Stainless Steel / Plastic	70	27.30
229-9310S	Poly Storm	Roto	4 3⁄8"	Large Face - Stainless Steel	70	29.36
229-9220S	Poly Storm	Twin Roto	3 5⁄8"	Stainless Steel / Plastic	70	27.30
229-9330S	Poly Storm	Twin Roto	4 3⁄8"	Large Face - Stainless Steel	70	29.36
229-9230S	Poly Storm	Massage	3 5⁄8"	Stainless Steel / Plastic	70	29.36
229-9330S	Poly Storm	Massage	4 3⁄8"	Large Face - Stainless Steel	70	31.42
229-9240S	Poly Storm	Galaxy	3 5⁄8"	Stainless Steel / Plastic	70	24.21
229-9340S	Poly Storm	Galaxy	4 3⁄8"	Large Face - Stainless Steel	70	26.27
229-9250S	Poly Storm	Galaxy Massage	3 5⁄8"	Stainless Steel / Plastic	70	29.36
229-9260S	Poly Storm	Multi-Massage	3 5⁄8"	Stainless Steel / Plastic	70	24.21
229-9350S	Poly Storm	Multi-Massage	4 3⁄8"	Large Face - Stainless Steel	70	26.27
229-9270S	Poly Storm	Acupressure	3 5⁄8"	Stainless Steel / Plastic	70	27.30
229-9360S	Poly Storm	Acupressure	4 3⁄8"	Large Face - Stainless Steel	70	29.36
229-9280S	Poly Storm	Rifled	3 5⁄8"	Stainless Steel / Plastic	70	24.21
229-9370S	Poly Storm	Rifled	4 3⁄8"	Large Face - Stainless Steel	70	26.27
229-9290S	Poly Storm	Twister	3 5⁄8"	Stainless Steel / Plastic	70	27.30
229-9380S	Poly Storm	Twister	4 3⁄8"	Large Face - Stainless Steel	70	29.36
229-9410S	Power Storm	Directional	5 1⁄4"	Stainless Steel / Plastic	45	28.33
229-9440S	Power Storm	Twirl	5 1⁄4"	Stainless Steel / Plastic	45	28.33
229-9420S	Power Storm	Roto	5 1⁄4"	Stainless Steel / Plastic	45	32.96
229-9430S	Power Storm	Twin Roto	5 1⁄4"	Stainless Steel / Plastic	45	32.96
229-9460S	Power Storm	Massage	5 1⁄4"	Stainless Steel / Plastic	45	37.08
229-9400S	Power Storm	Multi-Massage	5 1⁄4"	Stainless Steel / Plastic	45	28.33
229-9490S	Power Storm	Acupressure	5 1⁄4"	Stainless Steel / Plastic	45	32.96
229-9450S	Power Storm	Twister	5 1⁄4"	Stainless Steel / Plastic	45	32.96
229-9480S	Power Storm	Rifled	5 1⁄4"	Stainless Steel / Plastic	45	28.33

All Nova Storm Jets are available as Stainless Steel / Plastic or Two-Tone Plastic. Please call for Two-Tone Plastic part numbers and colors.

***Note**: All part numbers are for the new thread-in style jets. To order a snap-in style jet, change the part number prefix to 212-xxxx.*

217-0047 / 217-0057

218-5150

212-7797

210-3250

212-7757

Storm Jet Accessories

Part No.	Description	Case Quantity	List (US $)
217-0047	Mini-Storm Jet Nozzle Reducer - ¼" Orifice	12	0.33
217-0057	Poly-Storm Jet Nozzle Reducer - ¼" Orifice	12	0.33
218-5150	Adj. Cluster Storm Self-Alignment Ring	500	0.64
212-7797	Mini-Storm Hand-Held Jet -5-Scallop	5	76.66
210-3250	Poly-Storm Hand-Held Jet - 5-Scallop	5	93.10
212-7757	Power-Storm Hand-Held Jet - 5-Scallop	12	109.70

FEATURES:

- Seals two surfaces for the very best seal possible
- Easy installation
- No silicone required
- No silicone cleanup

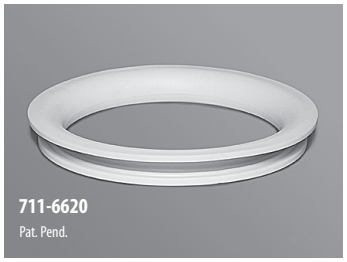

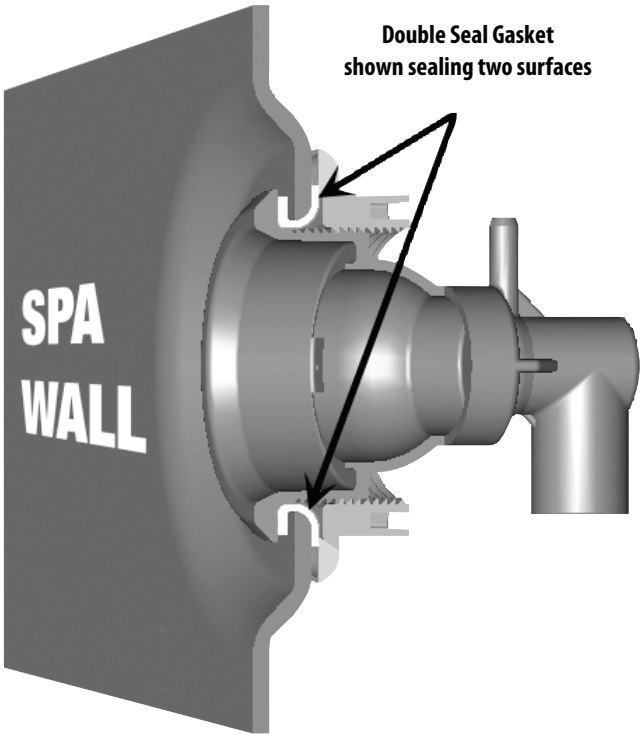

For years, OEM spa manufactures have been determined to build spas without the use of silicone. Now, finally there is a new gasket design that can be truly relied upon for a watertight seal that will last the life of the spa. Waterway's new, patent pending Double Seal Gaskets seal two surfaces for the best seal possible.

These gaskets are available now for our Mini, Poly, and Power Storm Jets, suctions and filters.

Double Seal Gaskets for Storm Jets

Part No.	Description	Case Quantity	List (US $)
711-6920	Mini-Storm Double Seal Gasket	500	1.42
711-4430	Poly Storm Double Seal Gasket	500	1.62
711-6620	Power Storm Double Seal Gasket	250	1.98

Gaskets and Self-Alignment Rings for Storm Jets

Part No.	Description	Case Quantity	List (US $)
711-6900	Mini-Storm Grommet Gasket	2000	0.50
711-6910	Mini-Storm Flat Gasket	3000	0.50
711-4400	Poly-Storm Grommet Gasket	2000	0.50
711-4410	Poly-Storm Flat Gasket	3000	0.50
711-6500	Power-Storm Grommet Gasket	500	0.69
711-6608	Power-Storm Flat Gasket	500	0.69
718-6960	Mini-Storm Self-Alignment Ring	800	0.81
218-4010	Poly-Storm Self-Alignment Ring	500	0.82
218-6680	Power-Storm Self-Alignment Ring - Regular	160	2.32
218-6680T	Power-Storm Self-Alignment Ring - Thin	160	2.32

EP Seals for Storm Jets

Part No.	Description	Case Quantity	List (US $)
806-0010	EP Seal for Cluster Storm Jets	60	0.45
806-0011	EP Seal for Mini-Storm Jets	60	0.82
806-0012	EP Seal for Poly Storm Jets	60	1.12
806-0013	EP Seal for Power Storm Jets	60	1.88

FEATURES:

- Adjustable flow control
- Large 1 ½" socket intake
- Available in smooth face and 5-Scallop escutcheons
- Four water nozzle sizes to choose from: ½" - ⅝" - ¾" and 1" *(see flow chart)*
- Self-alignment ring available for use without silicone (optional)
- Universal on/off control (on = counterclockwise / off = clockwise)

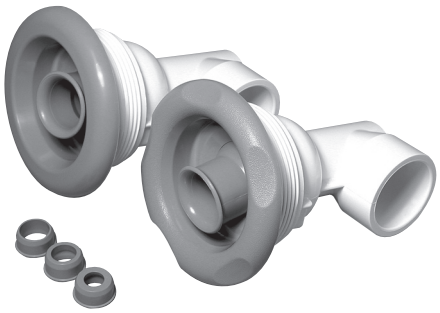

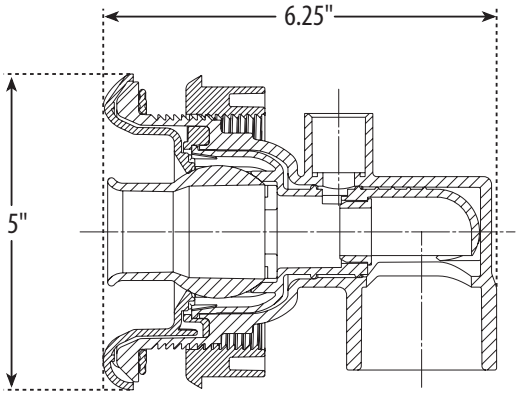

PRESSURE VERSUS FLOW RATE

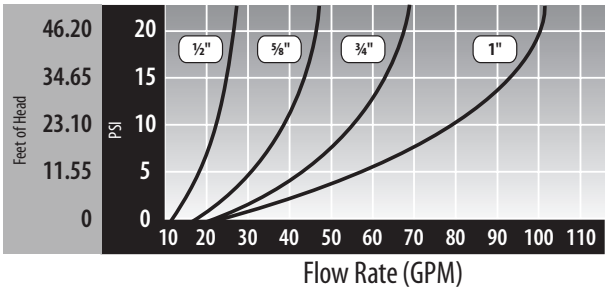

Whirlpool Jet Body Assemblies

Part No.	Description	Case Quantity	List (US $)
212-2000	Body - with Flat Gasket - 1 ½" S x ½" S	25	13.15
212-2000G	Body - with Grommet Gasket - 1 ½" S x ½" S	25	13.15
212-2010	Body - with Flat Gasket - 1" S x ½" S	25	13.15
212-2010G	Body - with Grommet Gasket - 1" S x ½" S	25	13.15
212-2130	Same Side Body - with Flat Gasket - 1 ½" S x ½" S	25	13.15
212-2130G	Same Side Body - with Grommet Gasket - 1 ½" S x ½" S	25	13.15

Whirlpool Jet Internals

Part No.	Description	Case Quantity	List (US $)
212-2020	Non-Adjustable - 5-Scallop	45	22.80
212-2030	Non-Adjustable - Smooth	45	22.80
212-2030S	Non-Adjustable - Stainless Steel	45	34.89
212-2050	Adjustable - 5-Scallop	45	27.41
212-2060	Adjustable - Smooth	45	27.41
212-2060S	Adjustable - Stainless Steel	45	39.49

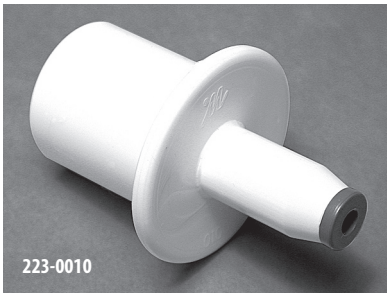

Whirlpool Accessories

Part No.	Description	Case Quantity	List (US $)
223-0010	Air Check Valve Adapter - ⅜" SB x ½" Spigot	600	1.95

FEATURES:

- Works as a valve to divert water to one or two locations
- Works as a high volume whirlpool jet
- Comes with a built in check valve
- Plumbing size is 1 ½" S x 2" Spigot for all water ports and ¾ RB air port

218-4360

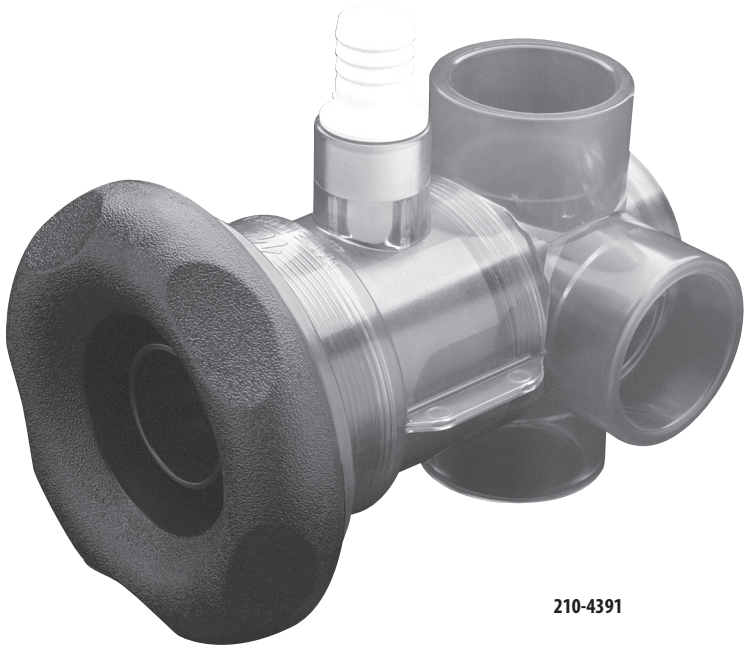

210-4391

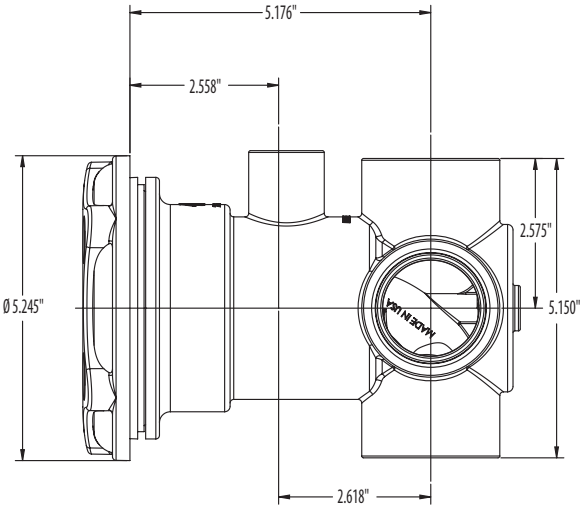

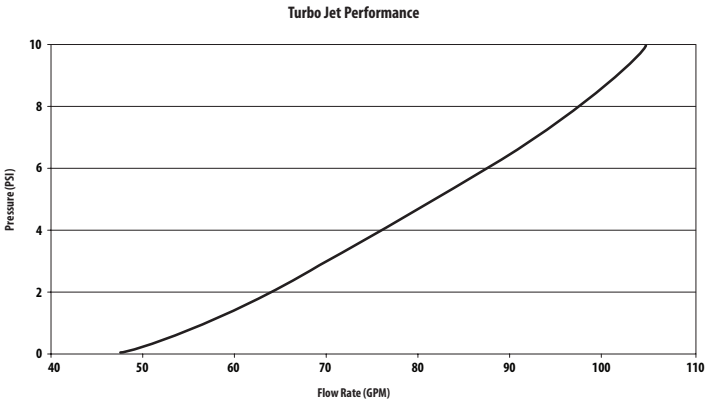

Turbo Jet

Part No.	Description	Case Quantity	List (US $)
210-4390	1 ½" S x 2" Spigot Water x ¾" RB Air - 5 ¼" Flange Diameter	200	63.04
218-4360	Turbo Jet Wrench	--	3.50

FEATURES:

- 8" wide eyeball
- Eyeball turrets up / down 20%
- Vent Enhancement System
- XL 2 ½" S intake
- Up to 1000 GPM input at 13 PSI

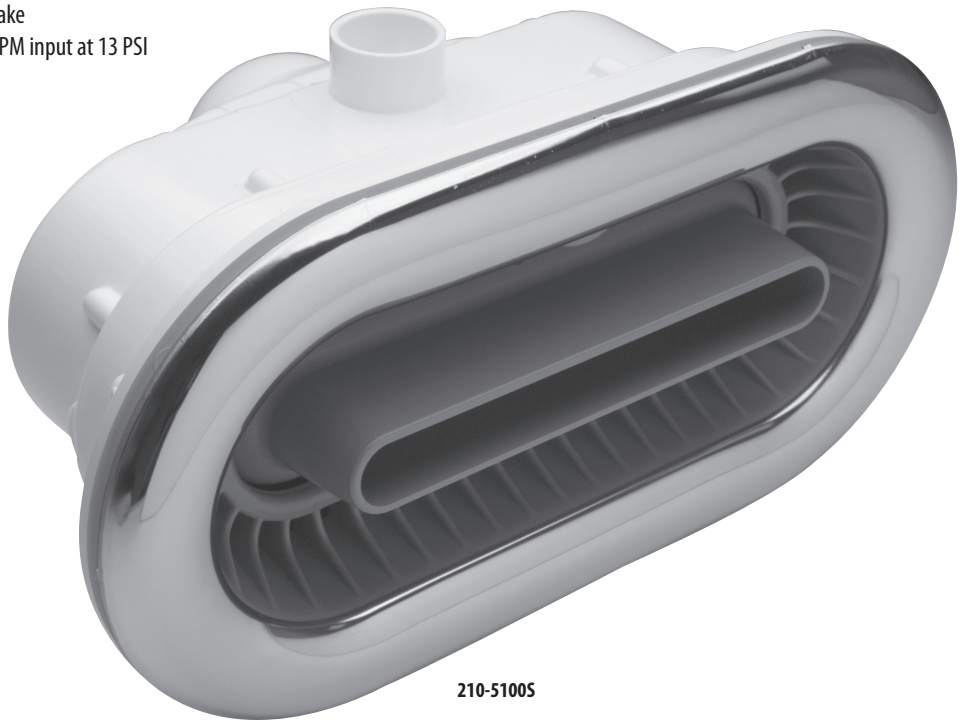

210-5100S

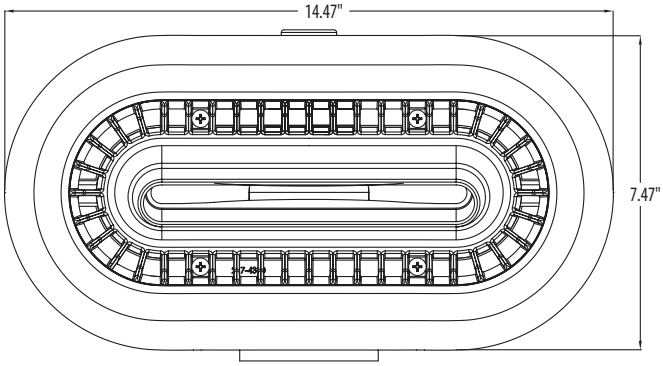

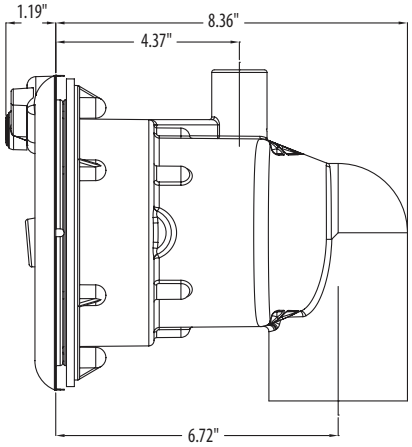

River Jets

Part No.	Description	Case Quantity	List (US $)
210-5100	2 ½" S x 1" Spigot	5	324.87
210-5100S	2 ½" S x 1" Spigot - Stainless Steel	5	385.99

See page 147 for swim spa configuration diagrams.

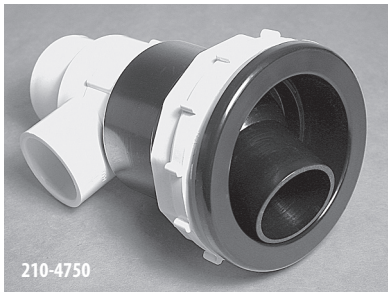
210-4750

Swim Jets

Part No.	Description	Color	Case Quantity	List (US $)
210-4750	1" S / 1 ½" Spigot x 1" Air - Short Body - ⅝" Orifice - 25 GPM with Gasket	White	40	35.03
210-4751	1" S / 1 ½" Spigot x 1" Air - Short Body - ⅝" Orifice - 25 GPM with Gasket	Black	40	35.03
210-4757	1" S / 1 ½" Spigot x 1" Air - Short Body - ⅝" Orifice - 25 GPM with Gasket	Gray	40	35.03
210-4740	1" S / 1 ½" Spigot x 1" Air - Short Body - 1" Orifice - 100 GPM with Gasket	White	40	35.03
210-4741	1" S / 1 ½" Spigot x 1" Air - Short Body - 1" Orifice - 100 GPM with Gasket	Black	40	35.03
210-4747	1" S / 1 ½" Spigot x 1" Air - Short Body - 1" Orifice - 100 GPM with Gasket	Gray	40	35.03

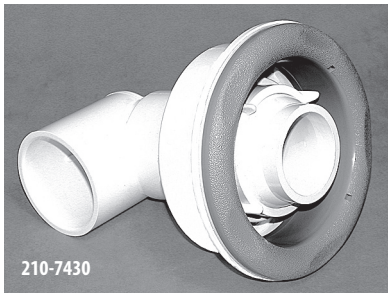
210-7430

210-7261S

210-3917

Old Faithful Jets

Part No.	Description	Case Quantity	List (US $)
210-7430	Ell Body - 2" S Water x ½" S Air - 0.925" Orifice - 90 GPM - 5-Scallop	6	37.00
210-7440	Ell Body - 2" S Water x ½" S Air - 1 ½" Orifice - 175 GPM - 5-Scallop	6	37.00
210-7270S	Ell Body - 2" S Water x ½" S Air - 0.925" Orifice - 90 GPM - Stainless Steel	6	64.19
210-7260S	Ell Body - 2" S Water x ½" S Air - 1 ½" Orifice - 175 GPM - Stainless Steel	6	64.19
210-3910	Straight Body - 2" S Water x ½" S Air - 0.925" Orifice - 90 GPM - 5-Scallop	6	37.00
210-3920	Straight Body - 2" S Water x ½" S Air - 1 ½" Orifice - 175 GPM - 5-Scallop	6	37.00
210-3910S	Straight Body - 2" S Water x ½" S Air - 0.925" Orifice - 90 GPM - Stainless Steel	6	64.19
210-3920S	Straight Body - 2" S Water x ½" S Air - 1 ½" Orifice - 175 GPM - Stainless Steel	6	64.19
210-7300	½" S Air x 2" S Water - .925" Orifice - 90 GPM	6	37.00
210-7310	½" S Air x 2" S Water - 1 ½" Orifice - 175 GPM	6	37.00

See page 147 for swim spa configuration diagrams.

Old Faithful Jet Accessories

Part No.	Description	Case Quantity	List (US $)
217-7300	1" Nozzle	1	4.99
217-7320	1 ½" Nozzle	1	4.99
711-7300	Gasket	1	4.22
218-1570	Old Faithful Wrench	6	15.10

FEATURES:

- Extra large 7 ½" construction
- Available with adjustable flow control
- Easy through-wall installation
- ¾" nozzle = 75 GPM flow
- Two ball bearings for added jet life
- 1 ½" S x 1 ½" S plumbing

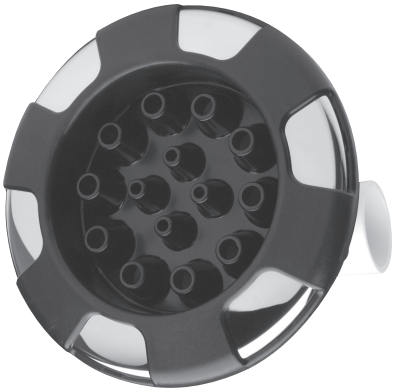

210-7180S / 210-8290S
Pat. #D,574,964 S

210-7150 / 210-8160

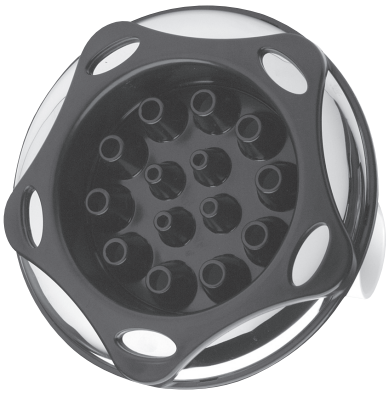

210-7170S / 210-8280S
Pat. #D,591,863 S

210-9540S / 210-9550S

210-7130S / 210-8270S
Pat. #D,574,501 S

Master Massage Jets

Part No.	Description	Style	Case Quantity	List (US $)
210-8290S	Non-Adjustable Jet Assembly – 1 ½" S x ½" S	6-Spoke - Stainless Steel	10	81.38
210-7180S	Adjustable Jet Assembly – 1 ½" S x ½" S	6-Spoke - Stainless Steel	10	99.33
210-8280S	Non-Adjustable Jet Assembly – 1 ½" S x ½" S	Revo - Stainless Steel	10	81.38
210-7170S	Adjustable Jet Assembly – 1 ½" S x ½" S	Revo - Stainless Steel	10	99.33
210-8270S	Non-Adjustable Jet Assembly – 1 ½" S x ½" S	Swirl - Stainless Steel	10	81.38
210-7130S	Adjustable Jet Assembly – 1 ½" S x ½" S	Swirl - Stainless Steel	10	99.33
210-9540S	Non-Adjustable Jet Assembly – 1 ½" S x ½" S	Nova - Stainless Steel	10	81.38
210-9550S	Adjustable Jet Assembly – 1 ½" S x ½" S	Nova - Stainless Steel	10	99.33
210-8160	Non-Adjustable Jet Assembly – 1 ½" S x ½" S	5-Scallop	10	46.75
210-7150	Adjustable Jet Assembly – 1 ½" S x ½" S	5-Scallop	10	64.77
210-8160S	Non-Adjustable Jet Assembly – 1 ½" S x ½" S	Smooth - Stainless Steel	10	77.40
210-7150S	Adjustable Jet Assembly – 1 ½" S x ½" S	Smooth - Stainless Steel	10	95.48

FEATURES:

- Designed specifically for in-ground portable spa applications
- Accepts all Mini-Storm and Poly Storm series snap-in jet internals
- Allows for flex or rigid plumbing
- Resists plumbing deterioration in harsh soils
- Resists rodent damage to plumbing
- Made of NSF fitting grade PVC material

NEW

212-0380

212-0390

In-Ground Portable Spa Jet Body Assemblies

Part No.	Description	Case Quantity	List (US $)
212-0380	In-Ground Mini-Storm Jet Body Assembly - 3/4" S x 1/2" S / 3/4" Spigot		7.81
212-0390	In-Ground Poly Storm Jet Body Assembly - 3/4" S x 1/2" S / 3/4" Spigot		8.71

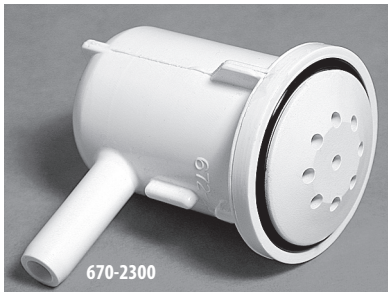
670-2300

670-2310

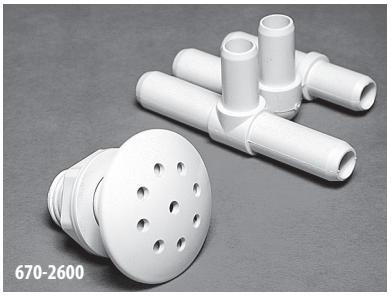
670-2600

670-2500

670-2290

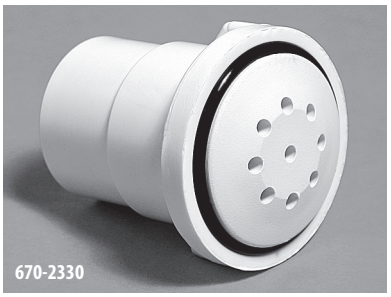
670-2330

Top-Flo Air Injectors

Part No.	Description	Color	Case Quantity	List (US $)
670-2300	⅜" SB Ell Body Assembly	White	100	6.29
670-2350	⅜" SB Ell Body Assembly	Stainless Steel	100	9.02
670-2310	½" S Ell Body Assembly	White	100	6.29
670-2360	½" S Ell Body Assembly	Stainless Steel	100	8.02
670-2600	⅜" SB Multi-Body Assembly	White	200	5.34
670-2330	1" Spigot Straight Body Assembly	White	50	6.29
670-2380	1" Spigot Straight Body Assembly	Stainless Steel	100	9.02
670-2290	⅜" SB Straight Body Assembly	White	150	5.95
670-2390	⅜" SB Straight Body Assembly	Stainless Steel	150	8.33
670-2500	Ozone Air Injector – ⅜" Barb Body	White	150	6.29

670-2190

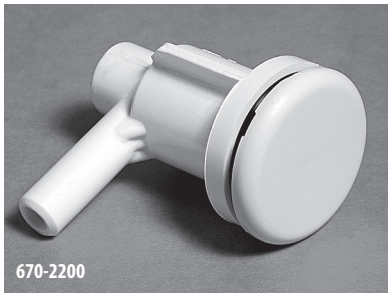
670-2200

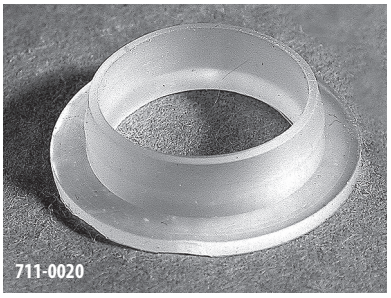
711-0020

Lo-Pro Air Injectors

Part No.	Description	Case Quantity	List (US $)
670-2190	1" Spigot x ¾" - Adapter Style - Stainless Steel	75	9.02
670-2200	⅜" SB - Ell Body	150	6.29
670-2210	⅜" SB - Ell Body - Stainless Steel	150	9.02
711-0020	Grommet Gasket	150	0.49

Stealth Blower Assemblies

Part No.	Description	Amps	Case Quantity	List (US $)
700-1011-000	1.0 HP - 110V - 1 ½" S / 2" Spigot	6.7	6	179.55
700-1511-000	1.5 HP - 110V - 1 ½" S / 2" Spigot	7.6	6	204.15
700-1022-000	1.0 HP - 220V - 1 ½" S / 2" Spigot	4.0	6	192.73
700-1522-000	1.5 HP - 220V - 1 ½" S / 2" Spigot	4.2	6	209.90
700-2011-000	2.0 HP - 110V - 1 ½" S / 2" Spigot	8.8	6	258.23
700-2022-000	2.0 HP - 230V - 1 ½" S / 2" Spigot	5.8	6	237.31

See Blower Sizing on page 141 to calculate your required blower size.
Listed price is without cord. Please call Waterway for part number and pricing with cord.

FEATURES:
- Shuts off 100% with a 180° turn
- Available in two body sizes: ¾" Socket or ¾" Shur-Grip
- Used for waterfalls, water features or neck jets
- Available in multiple colors

600-4707

600-4717

Deluxe 180° Shut Off Valves

Part No.	Description	Style	Case Quantity	List (US $)
600-4700	¾" S x ¾" S	5-Scallop	90	23.98
600-4710	Shur-Grip - ¾" SB x ¾" SB	5-Scallop	90	23.98

FEATURES:
- 100% shut off
- Three different body styles to choose from
- Horizontal model is submersible
- Top access for easy servicing
- Works great for waterfalls and neck jets
- Sleeve allows for on/off adjustments with fewer turns

602-4440

600-4367

600-4377

600-4387

600-4607

On / Off Turn Valves

Part No.	Description	Style	Case Quantity	List (US $)
600-4360	1" Vertical - Single Port	5-Scallop	100	22.61
600-4370	1" Vertical - Dual Port	5-Scallop	90	23.97
600-4380	1" Horizontal - Dual Port	5-Scallop	100	23.97
600-4600	1 ½" Vertical - Single Port	5-Scallop	40	28.31
602-4440	Sleeve *(low volume applications only)*	--	40	0.83

FEATURES:
- Diverts water to one or two ports
- Top access for easy service
- 2" model wall fittings are sealed with o-rings
- 1" models available with one or two ports
- Available in multiple colors

600-4227

600-4217

600-4237

Top Access Diverter Valves

Part No.	Description	Style	Case Quantity	List (US $)
600-4220	1" Vertical - 1-Port	5-Scallop	90	22.29
600-4210	1" Vertical - 2-Port	5-Scallop	90	22.29
600-4230	1" Horizontal - 2-Port	5-Scallop	90	22.29
600-3020	2" Horizontal - 2-Port	5-Scallop	15	31.43
600-3040	2" Vertical - 2-Port	5-Scallop	15	31.43

600-3027

600-3047

FEATURES:
- Shuts off 100% with a 180° turn
- Available in two body sizes: ¾" Socket or ¾" Shur-Grip
- Used for waterfalls, water features or neck jets
- Available in multiple colors

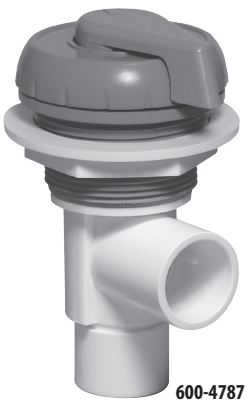
600-4787

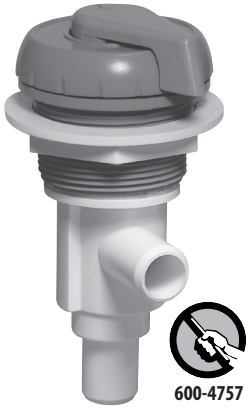
600-4757

Deluxe 180° Shut Off Valves

Part No.	Description	Style	Case Quantity	List (US $)
600-4750	Shur-Grip - ¾" SB x ¾" SB	Notched	100	23.98
600-4780	¾" S x ¾" S	Notched	100	23.98

FEATURES:
- Diverts water to one or two ports
- Top access for easy service
- 2" model wall fittings are sealed with o-rings
- 1" models available with one or two ports
- Available in multiple colors

600-4207

600-4347

600-4337

Top Access Diverter Valves

Part No.	Description	Style	Case Quantity	List (US $)
600-4200	1" Vertical - 1-Port	Notched	90	22.29
600-4340	1" Vertical - 2-Port	Notched	90	22.29
600-4330	1" Horizontal - 2-Port	Notched	90	22.29
600-3010	2" Horizontal - 2-Port	Notched	15	31.43
600-3060	2" Vertical - 2-Port	Notched	15	31.43

600-3017

600-3067

Top Side Valves / **6-Spoke Valves**

FEATURES:

- Shuts off 100% with a 180° turn
- Available in two body sizes: ¾" Socket or ¾" Shur-Grip
- Used for waterfalls, water features or neck jets
- Available in multiple colors

Deluxe 180° Shut Off Valves

	Part No.	Description	Style	Case Quantity	List (US $)
	600-4720	¾" S x ¾" S	6-Spoke	90	23.98
SP	600-4730	Shur-Grip – ¾" SB x ¾" SB	6-Spoke	90	23.98
	600-3190	¾" S x ¾" S	6-Spoke - Two Tone	90	25.12
SP	600-3210	Shur-Grip – ¾" SB x ¾" SB	6-Spoke - Two Tone	90	25.12

FEATURES:

- 100% shut off
- Three different body styles to choose from
- Horizontal model is submersible
- Top access for easy servicing
- Works great for waterfalls and neck jets
- Sleeve allows for on/off adjustments with fewer turns

On / Off Turn Valves

Part No.	Description	Style	Case Quantity	List (US $)
600-4400	1" Vertical - Single Port	6-Spoke	100	22.61
600-4410	1" Vertical - Dual Port	6-Spoke	90	23.97
600-4420	1" Horizontal - Dual Port	6-Spoke	100	23.97
600-3180	1" Vertical - Dual Port	6-Spoke - Two Tone	90	23.56
602-4440	Sleeve *(low volume applications only)*	--	40	0.83

FEATURES:

- Diverts water to one or two ports
- Top access for easy service
- 2" model wall fittings are sealed with o-rings
- 1" models available with one or two ports
- Available in multiple colors

Top Access Diverter Valves

Part No.	Description	Style	Case Quantity	List (US $)
600-3610	1" Vertical - 1-Port	6-Spoke	70	22.10
600-3600	1" Vertical - 2-Port	6-Spoke	70	22.10
600-3620	1" Horizontal - 2-Port	6-Spoke	70	23.14
600-3220	2" Horizontal - 2-Port	6-Spoke	15	31.43
600-3230	2" Vertical - 2-Port	6-Spoke	15	31.43
600-3150	1" Vertical - 1-Port	6-Spoke - Two Tone	90	23.05
600-3160	1" Vertical - 2-Port	6-Spoke - Two Tone	90	23.05
600-3170	1" Horizontal - 2-Port	6-Spoke - Two Tone	90	23.05
600-3140	2" Vertical - 2-Port	6-Spoke - Two Tone	15	33.35

FEATURES:
- Shuts off 100% with a 180° turn
- Available in two body sizes: ¾" Socket or ¾" Shur-Grip
- Used for waterfalls, water features or neck jets
- Available in multiple colors

600-3259DSG-1
Pat. #D,597,863 S

Deluxe 180° Shut Off Valves

Part No.	Description	Style	Case Quantity	List (US $)
600-3280	¾" S x ¾" S	Revo - Two Tone	90	25.12
600-3250	Shur-Grip – ¾" SB x ¾" SB	Revo - Two Tone	90	25.12

FEATURES:
- 100% shut off
- Three different body styles to choose from
- Horizontal model is submersible
- Top access for easy servicing
- Works great for waterfalls and neck jets
- Sleeve allows for on/off adjustments with fewer turns

602-4440

600-3299DSG-7
Pat. #D,597,863 S

On / Off Turn Valves

Part No.	Description	Style	Case Quantity	List (US $)
600-3290	1" Vertical - Dual Port	Revo - Two Tone	90	23.56
602-4440	Sleeve *(low volume applications only)*	--	40	0.83

FEATURES:
- Diverts water to one or two ports
- Top access for easy service
- 2" model wall fittings are sealed with o-rings
- 1" models available with one or two ports
- Available in multiple colors

600-3639DSG-1
Pat. #D,597,863 S

600-3339DSG-1
Pat. #D,597,863 S

Top Access Diverter Valves

Part No.	Description	Style	Case Quantity	List (US $)
600-3630	1" Vertical - 1-Port	Revo - Two Tone	90	23.05
600-3330	1" Vertical - 2-Port	Revo - Two Tone	90	23.05
600-3340	1" Horizontal - 2-Port	Revo - Two Tone	90	23.05
600-3110	2" Vertical - 2-Port	Revo - Two Tone	15	33.35

600-3349DSG-1
Pat. #D,597,863 S

600-3119DSG-1
Pat. #D,597,863 S

Top Side Valves / **"S" Style Valves**

FEATURES:
- Shuts off 100% with a 180° turn
- Available in two body sizes: ¾" Socket or ¾" Shur-Grip
- Used for waterfalls, water features or neck jets
- Available in multiple colors

600-3309DSG-1

600-3269DSG-PS

Deluxe 180° Shut Off Valves

Part No.	Description	Style	Case Quantity	List (US $)
600-3300	¾" S x ¾" S	"S" Style - Two Tone	90	25.12
600-3260	Shur-Grip – ¾" SB x ¾" SB	"S" Style - Two Tone	90	25.12

FEATURES:
- 100% shut off
- Three different body styles to choose from
- Horizontal model is submersible
- Top access for easy servicing
- Works great for waterfalls and neck jets
- Sleeve allows for on/off adjustments with fewer turns

602-4440

600-3319DSGSTS

On / Off Turn Valves

Part No.	Description	Style	Case Quantity	List (US $)
600-3310	1" Vertical - Dual Port	"S" Style - Two Tone	90	23.56
602-4440	Sleeve *(low volume applications only)*	--	40	0.83

FEATURES:
- Diverts water to one or two ports
- Top access for easy service
- 2" model wall fittings are sealed with o-rings
- 1" models available with one or two ports
- Available in multiple colors

600-3249DSG-1

600-3279DSG-1

Top Access Diverter Valves

Part No.	Description	Style	Case Quantity	List (US $)
600-3240	1" Vertical - 1-Port	"S" Style - Two Tone	90	23.05
600-3270	1" Vertical - 2-Port	"S" Style - Two Tone	90	23.05
600-3320	1" Horizontal - 2-Port	"S" Style - Two Tone	90	23.05
600-3030	2" Vertical - 2-Port	"S" Style - Two Tone	15	33.35

600-3329DSG-PS

600-3039DSG-1

FEATURES:

- Shuts off 100% with a 180° turn
- Available in two body sizes: ¾" Socket or ¾" Shur-Grip
- Used for waterfalls, water features or neck jets
- Available in multiple colors

600-4819DSG-1

Deluxe 180° Shut Off Valves

Part No.	Description	Style	Case Quantity	List (US $)
600-4800	¾" S x ¾" S	Pin Wheel	100	25.12
600-4810	Shur-Grip – ¾" SB x ¾" SB	Pin Wheel	100	25.12

FEATURES:

- Diverts water to one or two ports
- Top access for easy service
- 2" model wall fittings are sealed with o-rings
- 1" models available with one or two ports
- Available in multiple colors

600-4779DSG-1

Top Access Diverter Valves

Part No.	Description	Style	Case Quantity	List (US $)
600-4790	1" Vertical - 1-Port	Pin Wheel	100	23.05
600-4830	1" Vertical - 2-Port	Pin Wheel	100	27.40
600-4840	1" Horizontal - 2-Port	Pin Wheel	100	27.40
600-4770	2" Vertical - 2-Port	Pin Wheel	20	33.35

Top Side Valves / **Humpback Valves**

FEATURES:

- Shuts off 100% with a 180° turn
- Available in two body sizes: ¾" Socket or ¾" Shur-Grip
- Used for waterfalls, water features or neck jets
- Available in multiple colors

600-3709DSG-S

600-3719DSG-S

Deluxe 180° Shut Off Valves

Part No.	Description	Style	Case Quantity	List (US $)
600-3700	¾" S x ¾" S	Humpback	--	25.12
600-3710	Shur-Grip – ¾" SB x ¾" SB	Humpback	--	25.12

FEATURES:

- 100% shut off
- Three different body styles to choose from
- Horizontal model is submersible
- Top access for easy servicing
- Works great for waterfalls and neck jets
- Sleeve allows for on/off adjustments with fewer turns

602-4440

600-4439DSG-S

On / Off Turn Valves

Part No.	Description	Style	Case Quantity	List (US $)
600-4430	1" Vertical - Single Port	Humpback	20	22.61
602-4440	Sleeve *(low volume applications only)*	--	40	0.83

FEATURES:

- Diverts water to one or two ports
- Top access for easy service
- 2" model wall fittings are sealed with o-rings
- 1" models available with one or two ports
- Available in multiple colors

600-4449DSG-S

Top Access Diverter Valves

Part No.	Description	Style	Case Quantity	List (US $)
600-4440	2" Vertical - 2-Port	Humpback	20	33.35

FEATURES:

- Restricts the amount of flow through On/Off Valves to any water feature
- Break off any one of the four different nozzle sizes for desired water flow

  3⁄16" – 4 GPM 1⁄4" – 7 GPM
  5⁄16" – 10 GPM 3⁄8" – 15 GPM

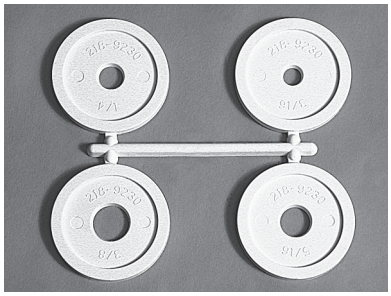

Water Restrictor Washer Tree

Part No.	Description	Case Quantity	List (US $)
218-9230	Water Restrictor Washer Tree	90	1.22

Valve Gaskets

Part No.	Description	Case Quantity	List (US $)
711-4310	1" Flat Gasket	100	0.42
711-4600	1 1⁄2" Gasket	100	0.58
711-3050	2" Gasket	100	0.69

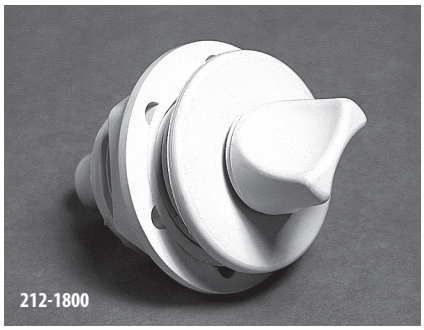

Air Bleed Assembly

Part No.	Description	Case Quantity	List (US $)
212-1800	3⁄8" Barb	75	11.59

FEATURES:

- Low-Profile design
- Compression molded silicone umbrella valve
- Two handle styles to choose from: standard and stainless steel
- Two body styles to choose from: short and extra short
- Available in a variety of colors

660-4459DSG-PS

660-4449-DSG

Waterway's TruSeal Air Controls were designed with simplicity in mind. With fewer parts and about half the size of standard air controls, they allow the plumbing to sit above the water level for optimum performance.

660-4400S

660-4400

660-4410S

660-4410

TruSeal Air Controls

Part No.	Description	Case Quantity	List (US $)
660-4400	Short Body - 2 ½"	150	12.78
660-4400S	Short Body - 2 ½" - Stainless Steel	150	14.91
660-4410	Extra Short Body - 2"	200	12.78
660-4410S	Extra Short Body - 2" - Stainless Steel	200	14.91
660-4450 NEW	Extra Short Body - 2" - "S" Style	200	12.78
660-4440	Low Profile - 1" - 6-Spoke Style	30	12.78

660-3570

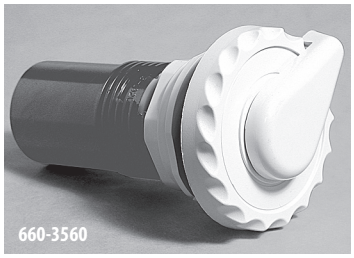
660-3560

660-3510

660-3580

660-4779-DSG

660-3599-DSGS

Top-Access Air Controls

Part No.	Description	Case Quantity	List (US $)
660-3570	1" Top-Access Air Control - Notched Style	100	17.13
660-3560	1" Top-Access Air Control - Scalloped Style	100	17.13
660-3510	1" Top-Access Air Control - 6-Spoke Style	100	17.13
660-3520	1" Top-Access Air Control - 6-Spoke Style - Two-Tone	100	18.08
660-3530	1" Top-Access Air Control - Revo Style - Two-Tone	100	18.08
660-3600	1" Top-Access Air Control - "S" Style - Two-Tone	100	18.08
660-3580	1" Top-Access Air Control - 5-Scallop Style - Textured	150	17.64
660-3000	1" Slip - Super Deluxe Air Control *(used for whirlpool baths)*	100	16.35
660-4770	1" Top-Access Air Control - Pin Wheel Style	--	18.08
660-3590	1" Top-Access Air Control - Humpback Style	--	18.08

413-4180

916-0030

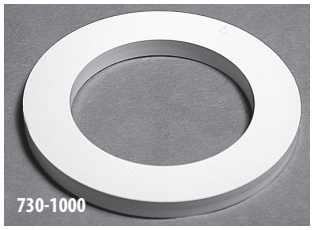
730-1000

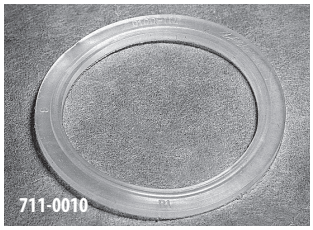
711-0010

Air Control Options

Part No.	Description	Case Quantity	List (US $)
413-4180	Blower Assist Tee - F.A.S. 1" S	200	4.53
413-4200	Blower Assist Tee - F.A.S. ½" S	100	4.53
916-3001	Escutcheon - Polished Chrome *(fits 660-3000)*	--	14.16
916-0030	Trim Ring - Stainless Steel	--	1.73
730-1000	Spacer and Gasket Assembly	500	1.09
711-0010	Gasket	1000	0.50

Ratings You Can Trust

VGB 2008

WARNING

Waterway continues to provide products meeting UL and NSF certification. These drains, grates and suctions are available now for installation in new projects and replacements.

• A minimum of two functioning suction outlets per pump must be installed. Suction outlets in the same plane (i.e. floor or wall) must be installed a minimum of three feet (3') / 1 meter apart, as measured from suction pipe center to suction pipe center.

• Dual suction fittings shall be placed in such locations and distances to avoid "dual blockage" by a user.

• Suction fittings shall not be located on seating areas or on the backrest for such seating areas.

• The maximum system flow rate shall not exceed the flow rating of any listed (per ASME A112.19.8a-2008) suction outlet cover installed. In the event of one suction outlet being completely blocked, the remaining suction outlets serving the system shall have a flow rating capable of the full flow of the pump(s).

• Never use pool or spa if any suction outlet component is damaged, broken, cracked, missing, or not securely attached.

•Replace damaged, broken, cracked, missing, or not securely attached suction outlet components immediately.

•Two or more suction outlets per pump should be installed in accordance with latest APSP Standards and CPSC guidelines, and follow all National, State, and Local codes applicable.

NOTE: See "Guidelines for Addressing Entrapment Hazards with Pools and Spas", U.S. Consumer Product Safety Commission, Publication #363-009081.

Call: (301) 504-0400

Visit website: http://www.cpsc.gov/cpscpub/pubs/363.pdf

640-3250 V

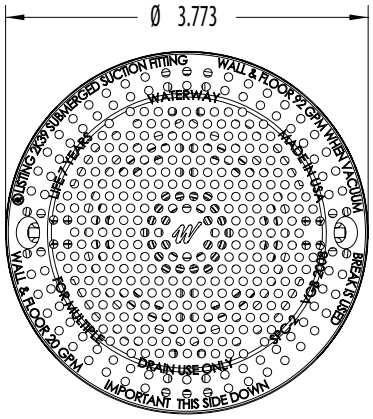

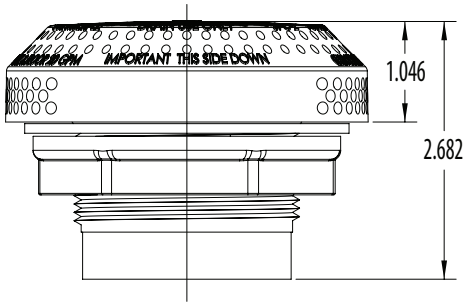

FEATURES:

- New Hi-Flo rating of 128 GPM (without vacuum break)
- For portable spas
- Available in 1 ½" S sizes

SPECIFICATIONS:

- Total Open Area: 4.01 sq. in.
- Floor Flow Rate: N/A
- Wall Flow Rate: 128 GPM

SPC-2 VP - 3.5" Hi-Flo Suctions

Part No.	Description	Case Quantity	List (US $)
640-325x VP	Hi-Flo Suction Assembly - 1 ½" Hex (without Vacuum Break)	80	16.35
640-328x VP	Hi-Flo Suction Assembly - 1 ½" 90° Ell (without Vacuum Break)	80	20.13
640-348x VP	Hi-Flo Suction Assembly - 1 ½" 90° Ell (with 642-4120 VAC Vacuum Break)	80	20.13

Patent Pending

640-3497 V

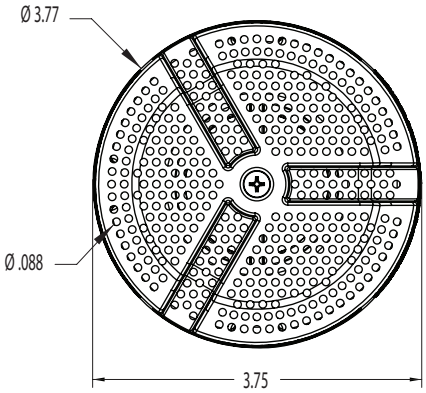

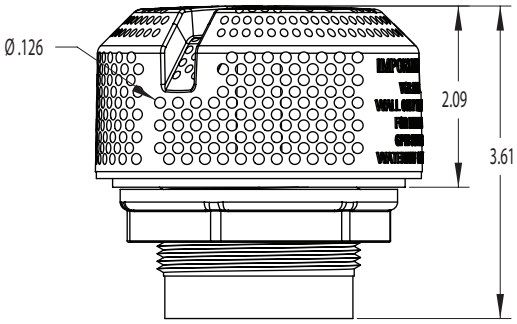

SPECIFICATIONS:

- Total Open Area: 6.24 sq. in.
- Floor Flow Rate: N/A
- Wall Flow Rate: 160 GPM

- For portable spas

3.5" Ultra Hi-Flo Suctions

Part No.	Description	Case Quantity	List (US $)
640-349x VP	3.5" Ultra Hi-Flo Suction - Tall Assembly	50	16.35

Replace the final x in the part number with the color of your choice (see page iv for colors).

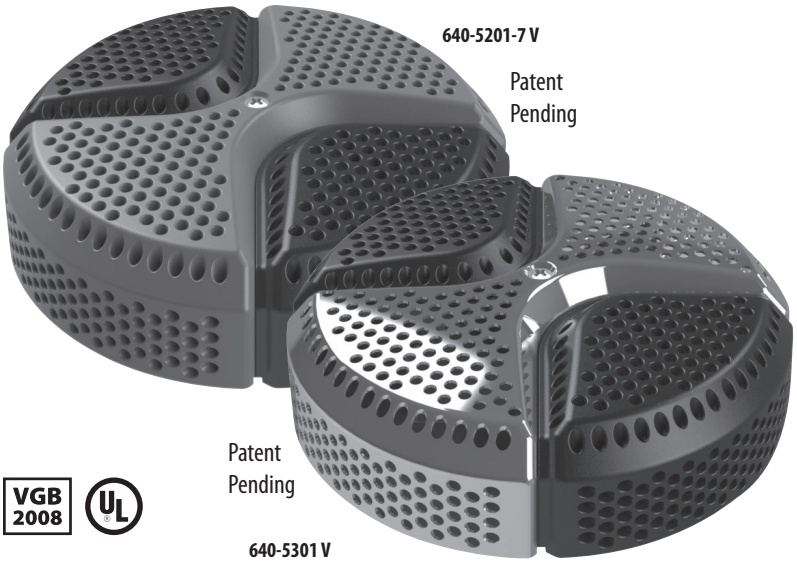

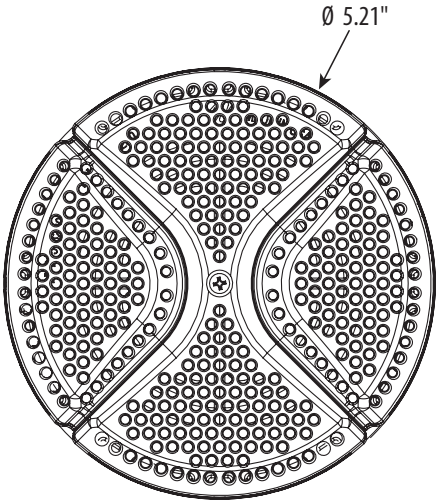

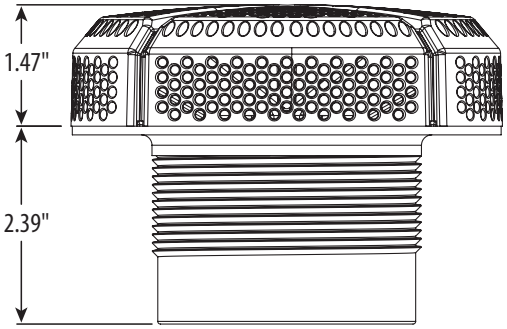

FEATURES:

- Flow Rate of 252 GPM (portable spas only)
- Available in 2" and 2 ½" S sizes
- Two tone color for additional color coordination
- Available in Stainless Steel / color of your choice

5" Designer Pro Series Suctions

Part No.	Description	Case Quantity	List (US $)
640-520x V	5" Designer Pro Series Suction - 2" S - Two Tone	35	25.65
640-525x V	5" Designer Pro Series Suction -2 ½" S - Two Tone	35	25.65
640-530x V	5" Designer Pro Series Suction - 2" S - Two Tone Stainless Steel	35	36.29
640-535x V	5" Designer Pro Series Suction -2 ½" S - Two Tone Stainless Steel	35	36.29

Replace the final x in the part number with the color of your choice (see page iv for colors).

640-3797 V

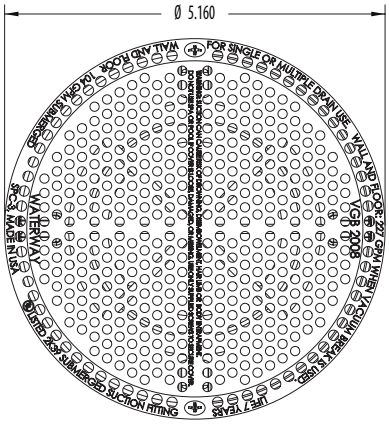

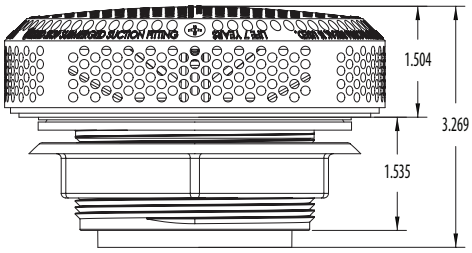

FEATURES:

- New Super Hi-Flo Rating of 251 GPM (portable spas only)
- Available in 2" and 2 ½" S sizes
- 2 ½" can be used with fittings (below)

SPECIFICATIONS:

- Total Open Area: 9.02 sq. in.

SPC-3 VP - 5" Hi-Flo Suctions

Part No.	Description	Case Quantity	List (US $)
640-378x V	5" Super Hi-Flo Suction Assembly - 2" S	35	22.73
640-379x V	5" Super Hi-Flo Suction Assembly - 2 ½" S	35	22.73
640-3570S V	5" Super Hi-Flo Suction Assembly - 2" S - Stainless Steel	35	33.37
640-3580S V	5" Super Hi-Flo Suction Assembly - 2 ½" S - Stainless Steel	35	33.37

Replace the final x in the part number with the color of your choice (see page iv for colors).

642-3680

642-3700

642-3610

Non-Vacuum Break Fittings for 2 ½" S SPC-3 VP Suctions

Part No.	Description	Case Quantity	List (US $)
642-3680	2 ½" x 2" S Straight Adapter	80	5.97
642-3700	2 ½" x 2" S 90° Ell Adapter	55	5.97
642-3610	2 ½" S 90° Ell Adapter	70	7.00
642-3730	2" S 90° Threaded Ell Adapter	35	5.97
642-3750	2" Threaded Straight Adapter	50	5.97

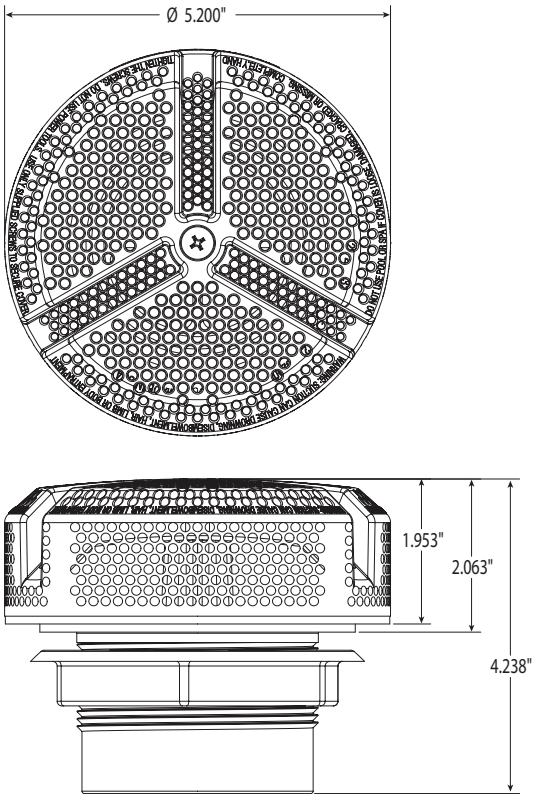

FEATURES:

- Ultra Flo Rating of 264 GPM (portable spas only)
- Available in 2" and 2 ½" S sizes
- 2 ½" can be used with fittings (below)

SPECIFICATIONS:

- Total Open Area: 11.87 sq. in.

5" Ultra Flo Suctions

Part No.	Description	Case Quantity	List (US $)
640-394x VP	5" Ultra Flo Suction Assembly - 2" S	35	22.99
640-393x VP	5" Ultra Flo Suction Assembly - 2 ½" S	35	22.99

Replace the final x in the part number with the color of your choice (see page iv for colors).

642-3680

642-3700

642-3610

Non-Vacuum Break Fittings for 2 ½" S Ultra Flo Suctions

Part No.	Description	Case Quantity	List (US $)
642-3680	2 ½" x 2" S Straight Adapter	80	5.97
642-3700	2 ½" x 2" S 90° Ell Adapter	55	5.97
642-3610	2 ½" S 90° Ell Adapter	70	7.00
642-3730	2" S 90° Threaded Ell Adapter	35	5.97
642-3750	2" Threaded Straight Adapter	50	5.97

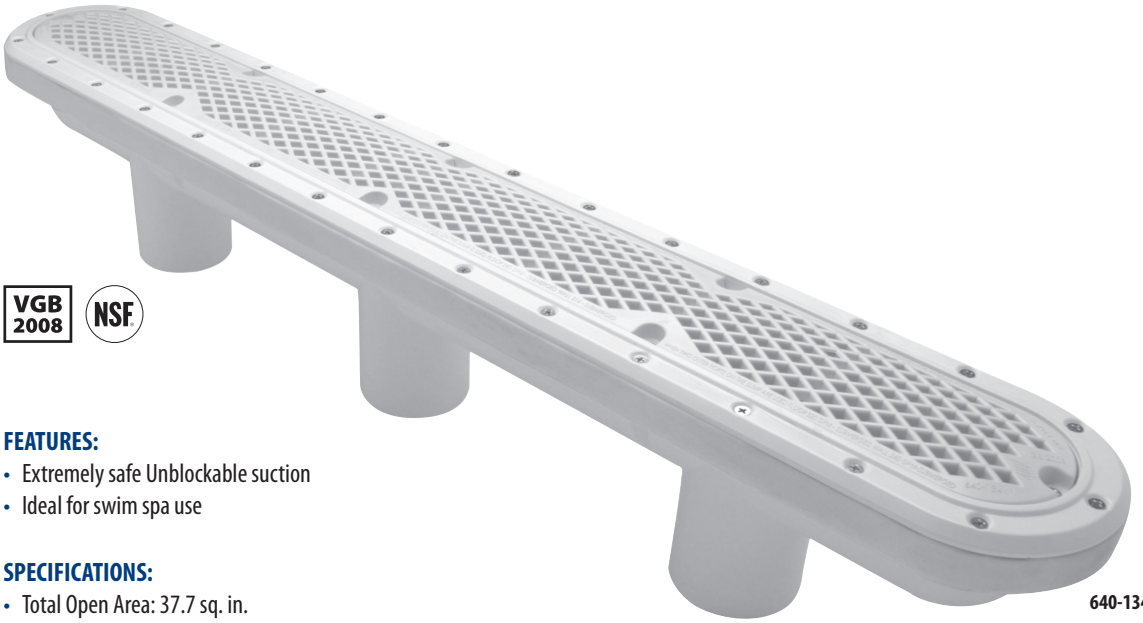

640-1340LG V

FEATURES:

- Extremely safe Unblockable suction
- Ideal for swim spa use

SPECIFICATIONS:

- Total Open Area: 37.7 sq. in.
- Floor Flow Rate (One Port Center): 280 GPM @3.75 ft/sec
- Floor Flow Rate (Two Ports): 320 GPM @ 4.29 ft/sec
- Wall Flow Rate (One Port Center): 216 GPM @ 2.89 ft/sec
- Wall Flow Rate (Two Ports): 240 GPM @ 3.22 ft/sec
- Flow Rate @ 1.5 ft/sec: 110 GPM

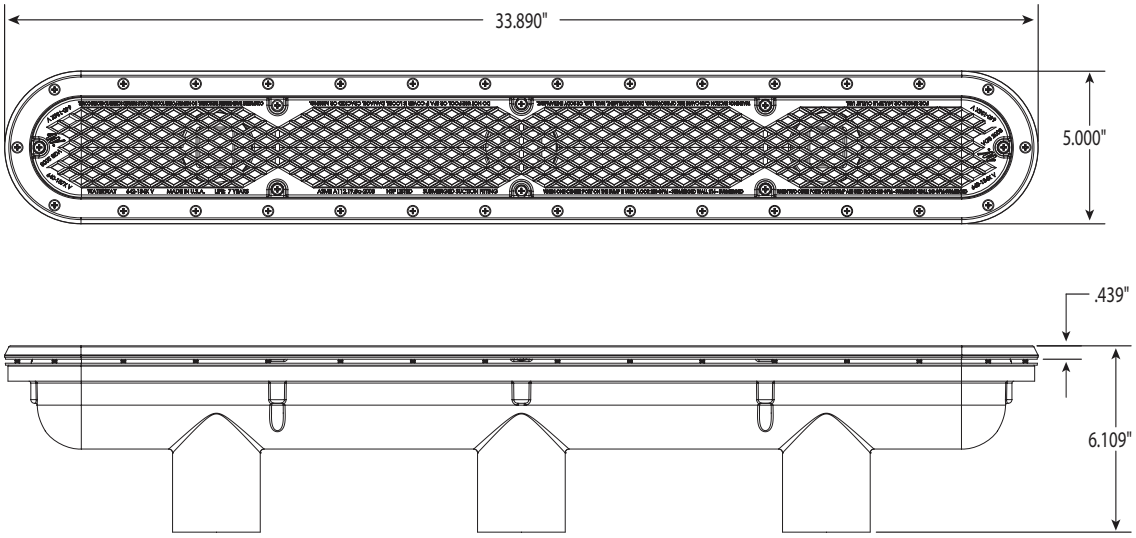

32" Diamond Fiberglass Strip Drain

Part No.	Description	Case Quantity	List (US $)
640-134xLG V	32" Diamond Strip Drain - Fiberglass	1	347.80

Replace the final x in the part number with the color of your choice (see page iv for colors).

FEATURES:

- Extremely easy to install
- Built-in diffuser
- Easily serviceable

Pat. #6,450,418

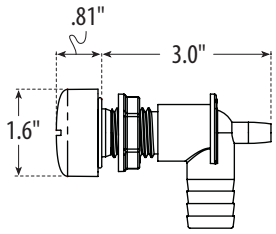

hole saw size: (2) x ⅞" diameter

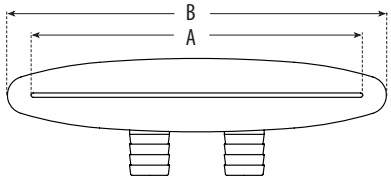

Part No.	"A" Dimension	"B" Dimension
675-3500	3.5"	4.31"
675-3600	7"	8"
675-3700	9"	10"

675-3500

675-3600

675-3700

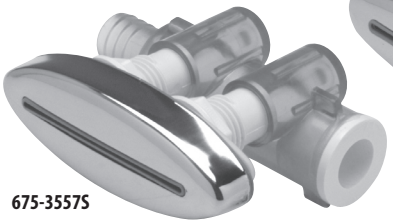

675-3557S

675-3667S

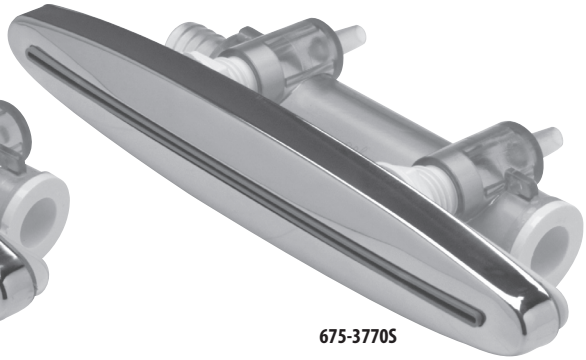

675-3770S

Waterway Cascades

Part No.	Description	Case Quantity	List (US $)
675-3500	3 ½" Cascade - (2) ¾" RB	20	29.24
675-3500S	3 ½" Cascade - (2) ¾" RB - Stainless Steel Blade	20	34.78
675-3508L	3 ½" LED Cascade - (2) ¾" RB	60	34.86
675-3508LS	3 ½" LED Cascade - (2) ¾" RB - Stainless Steel Blade	60	40.48
675-3550	3 ½" Cascade - (2) ¾" RB - with Manifold	--	32.61
675-3550S	3 ½" Cascade - (2) ¾" RB - Stainless Steel Blade - with Manifold	--	38.16
675-3558L	3 ½" LED Cascade - (2) ¾" RB - with Manifold	25	38.23
675-3558LS	3 ½" LED Cascade - (2) ¾" RB - Stainless Steel Blade - with Manifold	25	39.36
675-3600	7" Cascade - (2) ¾" RB	20	31.97
675-3600S	7" Cascade - (2) ¾" RB - Stainless Steel Blade	80	38.20
675-3608L	7" LED Cascade - (2) ¾" RB	20	39.77
675-3608LS	7" LED Cascade - (2) ¾" RB - Stainless Steel Blade	20	46.00
675-3660	7" Cascade - (2) ¾" RB - with Manifold	--	36.46
675-3660S	7" Cascade - (2) ¾" RB - Stainless Steel Blade - with Manifold	--	42.69
675-3668L	7" LED Cascade - (2) ¾" RB - with Manifold	20	44.26
675-3668LS	7" LED Cascade - (2) ¾" RB - Stainless Steel Blade - with Manifold	20	50.49
675-3700	9" Cascade - (2) ¾" RB	20	63.89
675-3700S	9" Cascade - (2) ¾" RB - Stainless Steel Blade	80	71.53
675-3708L	9" LED Cascade - (2) ¾" RB	20	78.48
675-3708LS	9" LED Cascade - (2) ¾" RB - Stainless Steel Blade	20	78.48
675-3770	9" Cascade - (2) ¾" RB - with Manifold	--	68.94
675-3770S	9" Cascade - (2) ¾" RB - Stainless Steel Blade - with Manifold	--	76.60
675-3778L	9" LED Cascade - (2) ¾" RB - with Manifold	20	83.53
675-3778LS	9" LED Cascade - (2) ¾" RB - Stainless Steel Blade - with Manifold	20	90.09

8" LOW PROFILE AQUA FALL

FEATURES:

- Simple design - less parts
- Low body profile
- 1" S intake
- 4-15 GPM

Pat. #6,450,418

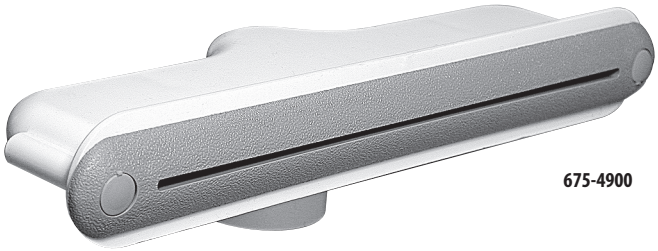

675-4900

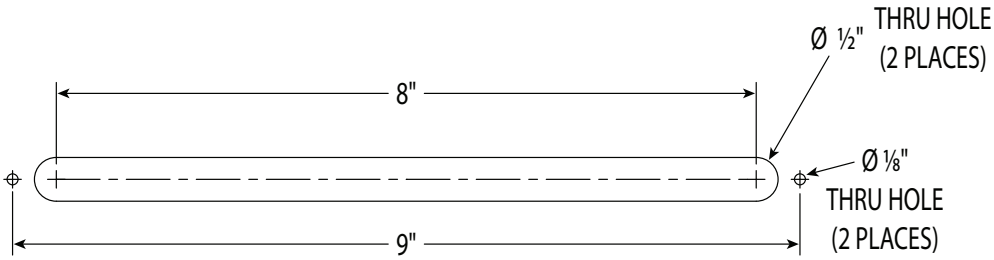

6" AQUA FALL

FEATURES:

- New 304 Stainless Steel escutcheon
- Simple design - less parts
- ¾" S intake
- 3-12 GPM

675-4000S

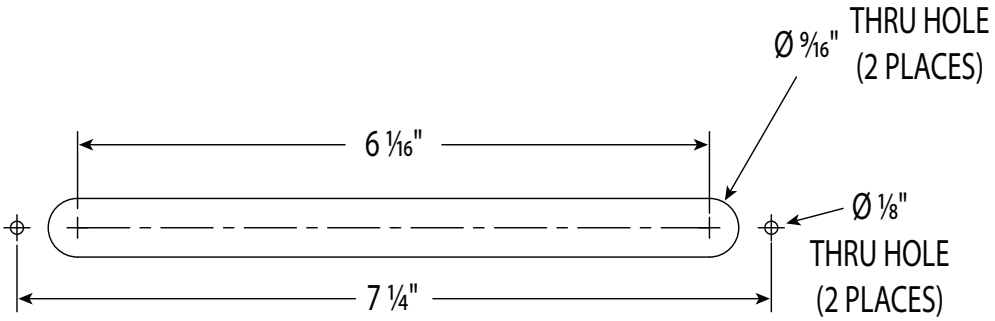

Aqua Falls

Part No.	Description	Case Quantity	List (US$)
675-4900	8" Low Profile Aqua Fall	40	63.89
675-4900S	8" Low Profile Aqua Fall - Stainless Steel Blade	40	74.06
675-4000	6" Aqua Fall	50	31.95
675-4000S	6" Aqua Fall - Stainless Steel Blade	50	42.46

FEATURES:

- Pops up when pressurized
- Drops down when depressurized
- Solid 7⁄16" rod shaped water stream, projects at 45° angle
- Available in several body styles and colors
- Maximum flow 4.76 GPM @ 3 PSI = 48" cascade

675-2000
Pat. Pend.

675-0707
Pat. Pend.

675-0807
Pat. Pend.

675-0791L

675-0908L

Pop-Up Water Features

Part No.	Description	Case Quantity	List (US$)
675-0700	Standard - ¾" RB	50	35.66
675-0710	Standard - ¾" SB	50	35.66
675-0720	Standard - ¾" S	50	35.66
675-0730	Standard - ½" S	50	35.66
675-0800	Top-Access - ¾" RB	50	35.66
675-0810	Top-Access - ¾" SB	50	35.66
675-0820	Top-Access - ¾" S	50	35.66
675-0830	Top-Access - ½" S	50	35.66
675-2000	Pop-Up 180° Waterfall Assembly	32	40.93
675-2000S	Pop-Up 180° Waterfall Assembly - Stainless Steel Cap	32	44.83
675-0790L	LED Pop-Up Water Feature - ¾" RB SP	50	42.05
675-0908L	LED Pop-Up Water Feature - ¾" RB	50	42.05
675-0918L	LED Pop-Up Water Feature - ¾" SB	50	42.05
675-0928L	LED Pop-Up Water Feature - ¾" S	50	42.05
675-0938L	LED Pop-Up Water Feature - ½" S	50	42.05

600-4778L-DSG

Pin Wheel LED Top Side Valves & Air Controls

Part No.	Description	List (US $)
600-4808L-DSG	180° Shut Off Valve - ¾" S	28.56
600-4818L-DSG	180° Shut Off Valve - ¾" SB	28.56
600-4798L-DSG	1" Diverter Valve - 1-Port Vertical	26.47
600-4838L-DSG	1" Diverter Valve - 2-Port Vertical	27.40
600-4848L-DSG	1" Diverter Valve - 2-Port Horizontal	27.40
600-4778L-DSG	2" Diverter Valve - 2-Port Vertical	38.49
660-4778L-DSG	1" Air Control	20.67

660-3598L-DSG

Humpback LED Top Side Valves & Air Controls

Part No.	Description	List (US $)
600-3708L-DSG	180° Shut Off Valve - ¾" S	28.56
600-3718L-DSG	180° Shut Off Valve - ¾" SB	28.56
600-4438L-DSG	1" Diverter Valve - 1-Port Vertical	26.47
600-4468L-DSG	1" Diverter Valve - 2-Port Vertical	27.40
600-4478L-DSG	1" Diverter Valve - 2-Port Horizontal	27.40
600-4448L-DSG	2" Diverter Valve - 2-Port Vertical	38.49
660-3598L-DSG	1" Air Control	20.67

600-3248L-DSG

"S" Style LED Top Side Valves & Air Controls

Part No.	Description	List (US $)
600-3308L-DSG	180° Shut Off Valve - ¾" S	28.56
600-3268L-DSG	180° Shut Off Valve - ¾" SB	28.56
600-3248L-DSG	1" Diverter Valve - 1-Port Vertical	26.47
600-3278L-DSG	1" Diverter Valve - 2-Port Vertical	27.40
600-3328L-DSG	1" Diverter Valve - 2-Port Horizontal	27.40
600-3038L-DSG	2" Diverter Valve - 2-Port Vertical	38.49
660-3608L-DSG	1" Air Control	20.67

NEW

5-Scallop LED Top Side Valves & Air Controls

Part No.	Description	List (US $)
600-4368L	1" On/Off Turn Valve - 1-Port Vertical	26.06
600-4378L	1" On/Off Turn Valve - 2-Port Vertical	27.40
600-4388L	1" On/Off Turn Valve - 2-Port Horizontal	27.40

660-3500L

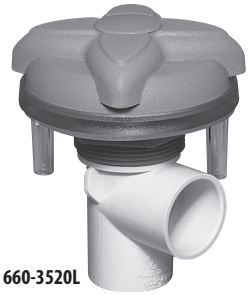
660-3520L

600-3500L

660-3510L

LED / Fiber Optic Star Valves and Air Controls

Part No.	Description	Case Quantity	List (US $)
660-3500L	1" Top Access Air Control - Star Style	300	23.12
600-3520L	1" On / Off Turn Valve - Single Port - Star Style	50	27.89
600-3500L	1" Top Access Diverter Valve - Star Style	50	27.43
600-3510L	2" Top Access Diverter Valve - Star Style	15	38.45

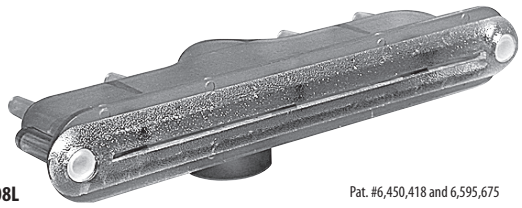
675-4008L

Pat. #6,450,418 and 6,595,675

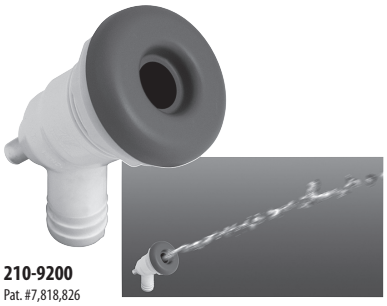
210-9200
Pat. #7,818,826

LED / Fiber Optic Water Features

Part No.	Description	Case Quantity	List (US $)
675-4008L	6" LED Aqua Fall	50	37.99
675-4908L	8" Low Profile LED Aqua Fall	40	71.14
210-9200	Flush Mount LED Water Feature	100	48.66
675-3508L	3 ½" LED Cascade - (2) ¾" RB	60	34.86
675-3508LS	3 ½" LED Cascade - (2) ¾" RB - Stainless Steel Blade	60	40.48
675-3608L	7" LED Cascade - (2) ¾" RB	20	39.77
675-3608LS	7" LED Cascade - (2) ¾" RB - Stainless Steel Blade	20	46.00
675-3708L	9" LED Cascade - (2) ¾" RB	20	78.48
675-3708LS	9" LED Cascade - (2) ¾" RB - Stainless Steel Blade	20	78.48

633-7078

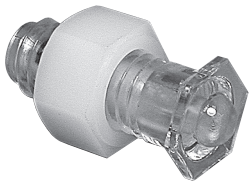

633-7088

633-7098

630-0008

630-5008

630-K008

660-6300

Waterway offers a wide assortment of LED Aqua Jets with an exclusive, patented LED probe for maximum luminosity. Call for pricing and selection.

LED Lights

Part No.	Description	Case Quantity	List (US $)
633-7078	½" Threaded Faceted Light Lens Assembly	500	1.80
633-7088	½" Threaded Hex Style Light Lens Assembly	500	1.80
633-7098	1" Threaded Facet Light Lens Assembly with LED Sleeve	200	3.44
630-0008	Mini 2 ⅛" Spa Light Assembly - Plastic Only	300	9.59
630-0008S	Mini 2 ⅛" Spa Light Assembly - Stainless Steel Escutcheon	120	11.08
630-5008	Standard 3 ½" Spa Light Assembly - Plastic Only	80	15.42
630-K008	5" Jumbo Spa Light Assembly - Plastic Only	40	36.14
660-6300	Accent Sconce Light Assembly *(3-12 fibers)*	300	19.44

630-0038

FEATURES:
- Designed for mounting in a cup holder recess
- Illuminates clear glasses and cups
- Requires only one LED

LED Cup Holder Light Lens

Part No.	Description	Case Quantity	List (US $)
630-0038	LED Cup Holder Light Lens	20	9.63

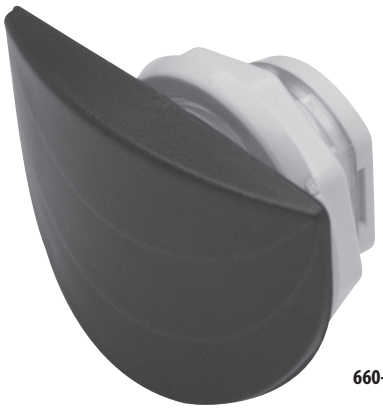

660-6401

FEATURES:
- Illuminates spa skirting
- Mounts to outside perimeter of spa cabinet
- Requires only one LED

LED Cabinet Light

Part No.	Description	Case Quantity	List (US $)
660-6400	LED Cabinet Light	--	7.00

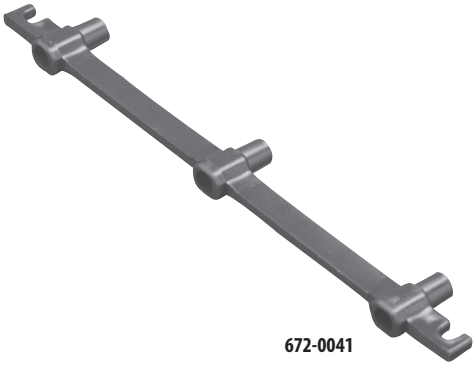

672-0041

FEATURES:
- Used as perimeter lighting up underneath spa shell or kick plate area
- Bends to conform to corners of any radius
- Accepts up to three LED lights

LED Strip Light

Part No.	Description	Case Quantity	List (US $)
672-0041	LED Strip Light	20	8.76

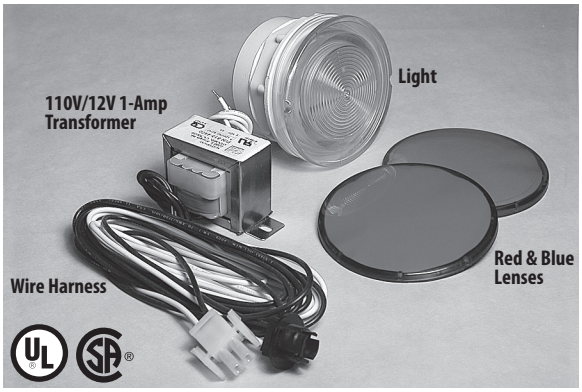

Standard 3 ½" O.E.M. Spa Light Kits

Part No.	Description	Case Quantity	List (US $)
630-5005	Plastic Only - with Red and Blue Lenses	50	17.63
630-5115	O.E.M. Kit - with 8 ft. Wire Harness - Bulb & 110V/12V - 1-Amp Transformer	40	33.98
630-5105	O.E.M. Kit - with 8 ft. Wire Harness and Bulb	50	22.67
630-5205	O.E.M. Kit - with 8 ft. Wire Harness - Bulb and 2-Pin Connector	50	31.20

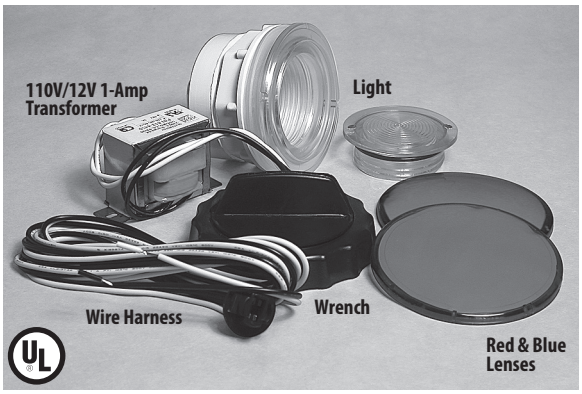

Front Access 3 ½" O.E.M. Spa Light Kits

Part No.	Description	Case Quantity	List (US $)
630-6005	Plastic Only - includes Wrench	50	23.91
630-6115	Kit - includes 8 ft. Wire Harness - Bulb - Wrench - 110V/12V 1-Amp Transformer	40	40.27
630-6105	Kit - includes 8 ft. Wire Harness - Bulb - Wrench	45	28.92
630-6205	Kit - includes 8 ft. Wire Harness - Bulb - Wrench - 2-Pin Connector	40	37.47

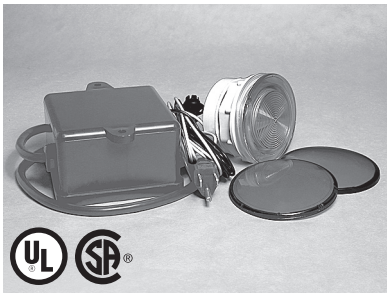

Spa Light Power Supply and NEMA Cord

Part No.	Description	Case Quantity	List (US $)
630-1105	110V/12V without Air Switch	20	63.33
630-1115	110V/12V with Air Switch	20	88.98

Jumbo 5" O.E.M. Spa Light Kits

Part No.	Description	Case Quantity	List (US $)
630-K005	Plastic Only - with Red and Blue Lenses	40	38.41
630-K008S	Plastic Only - Stainless Steel Escutcheon - with Red and Blue Lenses	40	43.59
630-K115	Kit - 8 ft. Wire Harness - 2-Pin Connector - Bulb - 110V/12V 1-Amp Transformer	20	54.95
630-K105	Kit - 8 ft. Wire Harness - Bulb	32	42.78

813-4370

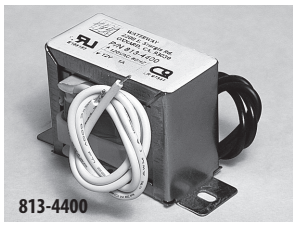
813-4400

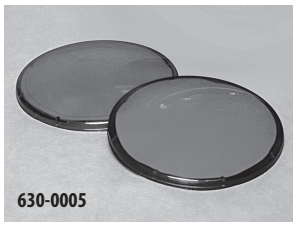
630-0005

711-6930 Pat. Pend.

Spa Light Accessories

Part No.	Description	Case Quantity	List (US $)
813-4370	Bulb #912	--	2.93
813-4400	1-Amp Transformer - 120V / 12V - 60Hz	40	12.11
813-4500	1-Amp Transformer - 230V / 12V - 50/60Hz	40	17.12
630-0005	Light Lens Kit - 1 Red and 1 Blue Lens	75	7.55
711-6930	Double-Seal Gasket - Mini Spa Light	75	1.42

NEW

FEATURES:
- Allows 1" flexible electrical conduit to be nicely mounted to spa cabinet or doghouse areas
- 1" Socket on both sides
- Mounts like a flush mount bulkhead fitting

210-1861

Electrical Bulkhead Wallfitting

Part No.	Description	Case Quantity	List (US $)
210-1861	1" Electrical Bulkhead Wallfitting with Cap	100	2.98

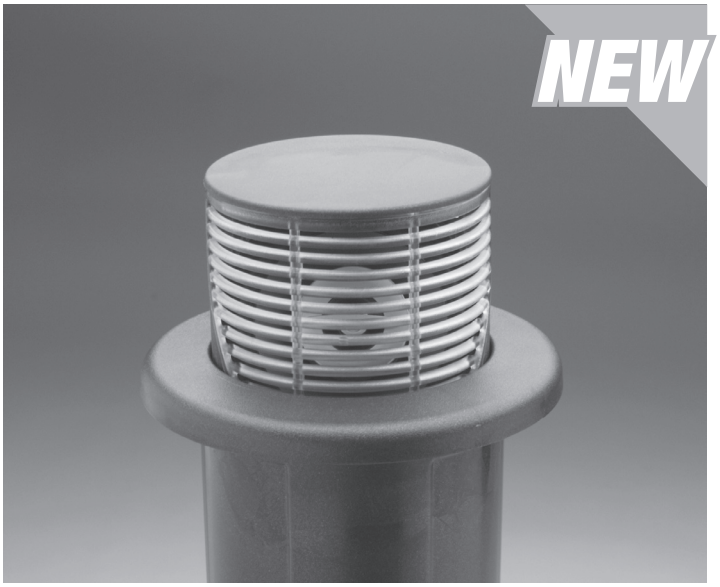

FEATURES:
- Improved premium grade speaker
- LED capable
- Dampening device
- Pop-up design

SPECIFICATIONS:
- 15 W RMS / 30 W Peak
- Impedance: 4 Ω ± 15% Ω
- Resonant Frequency: 110 Hz ± 20% Hz
- SPL: 70 dB ± 3 dB ref 1 W/1M
- Frequency Response: ~20 KHz, max ± 10 dB

6" Pop-Up Silo Speaker System

Part No.	Description	List (US $)
675-0630	6" Pop-Up Dampener Premium Speaker Assembly	161.27
675-0630L	6" LED Pop-Up Dampener Premium Speaker Assembly	169.61

FEATURES:
- Pop-Up design
- 5 ¼" coaxial marine speaker
- 75 Watt RMS - 150 Watt Peak
- Impedance: 4 Ohm
- SPL - 1 Watt/1 Meter - 88db
- Frequency Response: 80 Hz–20KHz
- Unique pattern - low fit

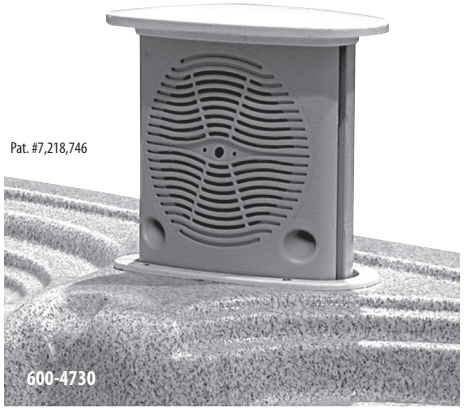

5 ¼" Coaxial Marine Spa Speaker System

Part No.	Description	Case Quantity	List (US $)
675-0100	5 ¼" Coaxial Marine Spa Speaker System	4	307.09

FEATURES:
- New pop-up design
- Round hole pattern for easy assembly
- Three-way speaker delivers low, medium and high range sound
- 340-degree rotational housing
- Waterproof

SPECIFICATIONS:
Dual 2" Drivers: Anti-Magnetic Design

Frequency Response: 185Hz – 20 KHz
Watts RMS: 40W
Watts Peak: 80W
Sensitivity: 84dB 1w/1M ±2dB
Resistance: 4 ohm

Pat. #7,814,583

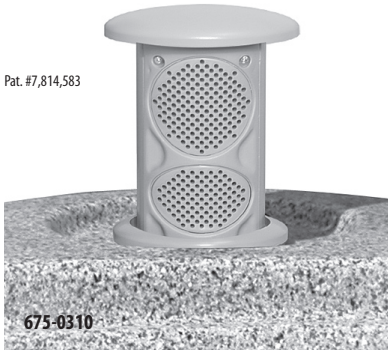

Spa Speaker System			
Part No.	Description	Case Quantity	List (US $)
676-0300	2" Pop-Up Speaker - Flush Cover	4	149.07
676-0310	2" Pop-Up Speaker - Dome Cover	4	149.07

FEATURES:
- Pop-up design
- Round hole pattern for easy assembly
- 340° rotational housing
- Marine grade waterproof speaker

SPECIFICATIONS:
3.5" coaxial marine speaker
25 watt RMS
75 watt peak
Impedance: 4 ohms ± 15%
SPL 89 dB ± 3 dB Ref 1 with 0.5 M
Frequency response: 20 KHz, Max ± 10 dB

Pat. #7,814,583

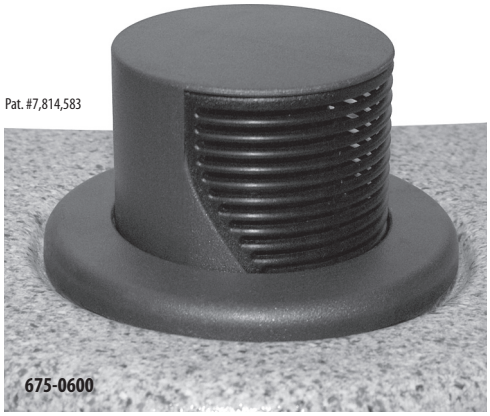

6" Pop-Up Silo Speaker System			
Part No.	Description	Case Quantity	List (US $)
675-0600	6" Pop-Up Silo Speaker Assembly	4	143.34

FEATURES:
- Water-resistant, premium-grade speaker
- Unique flush mount design
- No moving parts
- Easy installation
- Dual color schemes
- Private label available

SPECIFICATIONS:
- 3.5"
- 15 W RMS / 30 W Peak
- Impedance: 4 Ω ± 15% Ω
- Resonant Frequency: 110 Hz ± 20% Hz
- SPL: 70 dB ± 3 dB ref 1 W/1M
- Frequency Response: ~20 KHz, max ± 10 dB

Pat. Pend.

675-0450

675-0450L

4.5" Flush Mount Speaker and LED 4.5" Flush Mount Speaker

Part No.	Description	Case Quantity	List (US $)
675-0460	4.5" Flush Mount Speaker	5	76.40
675-0460L	4.5" LED Flush Mount Speaker	--	86.60

FEATURES:
- Fits both Clarion and Aeware marine stereos

Stereo Enclosures

Part No.	Description	Case Quantity	List (US $)
672-9001	Stereo Enclosure - Clarion CMD4A	20	16.70
672-9011	Stereo Enclosure - Aeware In-Tune 100	20	16.70
672-9101	Stereo Enclosure - Generic	20	16.70

FEATURES:
- Guillotine cover
- Fits most MP3 players
- Input and output ports for control unit and stereo

MP3 Player Holders

Part No.	Description	Color	Case Quantity	List (US $)
675-0200	MP3 Player Holder	White	20	32.74
675-0211	MP3 Player Holder	Black	20	36.56
675-0217	MP3 Player Holder	Gray	20	36.56
675-0219-DSG	MP3 Player Holder	Dark Silver Glitter	20	36.56
675-0219-STS	MP3 Player Holder	Sterling Silver	20	36.56

NEW

FEATURES:

- Floating guillotine-style weir
- Easy through-wall installation (requires only one round hole to mount)
- Easily accessible basket
- Skim Filter has easily accessible cartridge

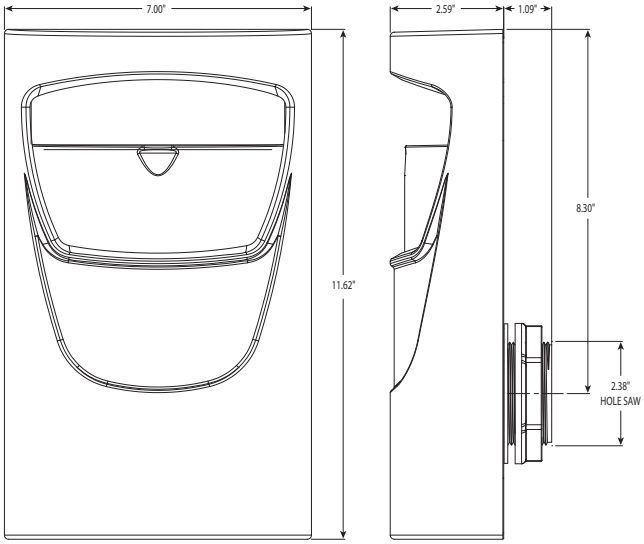

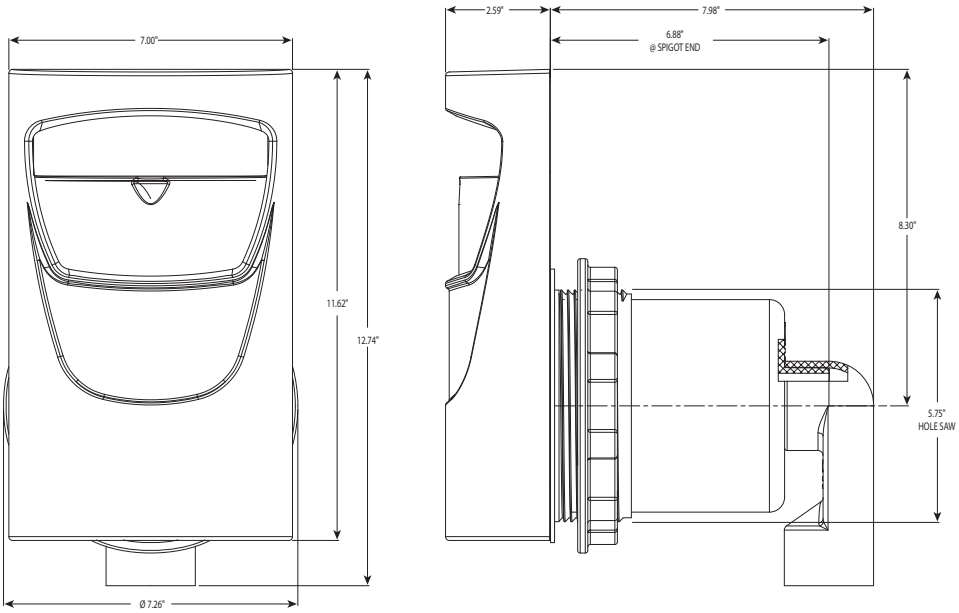

Deluxe Strip Skimmer and Strip Skim Filter

Part No.	Description	Case Quantity	List (US $)
510-6900	Deluxe Strip Skimmer - 1 ½" S	50	80.68
510-6910	Deluxe Strip Skim Filter - 1 ½" S	50	123.60

640-6920

640-6940

640-6961

640-6607

Strip Skimmers

Part No.	Description	Case Quantity	List (US $)
640-6920	Strip Skimmer - 1 ½" x Standard Nut	35	25.61
640-6940	Strip Skimmer - 1 ½" x 90° Ell	25	29.68
640-6960	Strip Skimmer - 1 ½" x Straight Adapter Nut	25	29.66
640-6600	Adjustable Strip Skimmer with Lint Basket - ½" S Ell	20	45.17

510-1500

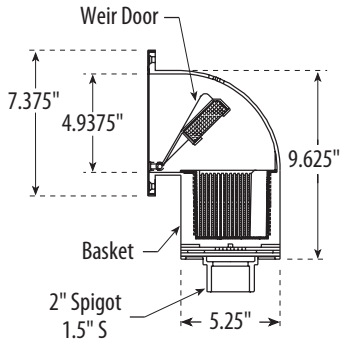

510-1600

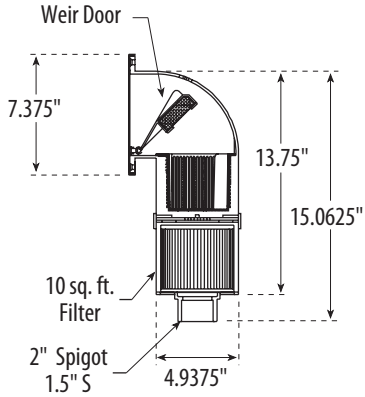

INCLUDES:

- 10 sq. ft. Cartridge
- EZ Flow Basket
- Flow Control Diverter Plate
- Trim Plate - White
- Mounting Gasket

510-1650T

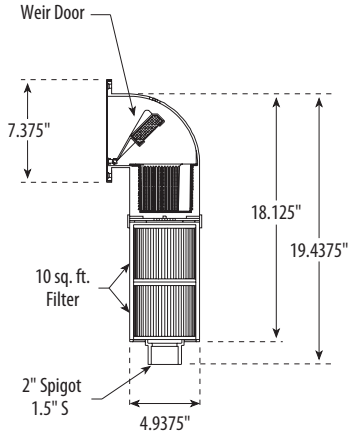

INCLUDES:

- 10 sq. ft. Cartridges (2)
- EZ Flow Basket
- Flow Control Diverter Plate
- Trim Plate - White
- Mounting Gasket

Front Access Skimmers and Skim Filters

Part No.	Description	Case Quantity	List (US $)
510-1500	Square Spa Skimmer – 1 ½" S / 2" Spigot - Flow Control with Trim Plate	4	78.04
510-1600	Square Spa Skim Filter – 1 ½" / 2" Spigot - 10 sq. ft.	4	120.81
510-1650T	Square Spa Skim Filter – 1 ½" / 2" Spigot - 20 sq. ft.	2	154.37

FEATURES:

- 50 sq. ft. Cartridges (2) (100 sq. ft. total)
- 2" Spigot Output Ports (2)
- Extra Large 5 ½" x 14" Weir Area
- Extra Large 8" x 14" Basket
- Easy Access to Basket and Cartridges
- Easy Through-Wall Installation

510-6600

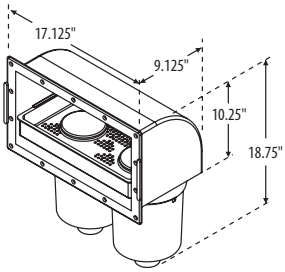

Hole Size 8.75" x 15.5"

FEATURES:

- 50 sq. ft. Cartridge
- 2" Spigot Output Port
- Easy access to basket and cartridges
- Easy Through-Wall Installation

510-9000

510-9020

510-6620

510-6700

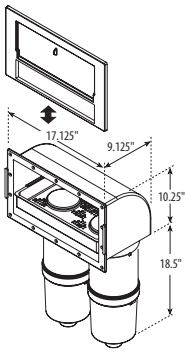

Hole Size 8.75" x 15.5"

FEATURES:

- 50 sq. ft. Cartridges (4) (200 sq. ft. total)
- 2" Spigot Outlet Ports (2)

510-9100

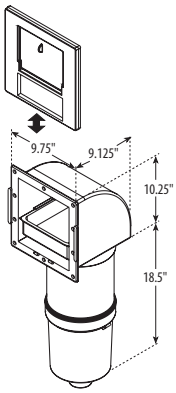

FEATURES:

- 50 sq. ft. Cartridges (2) (100 sq. ft. total)

672-5090

Front Access Skim Filters

Part No.	Description	Case Quantity	List (US $)
510-9000	50 sq. ft. Front Access Skim Filter - Single Port	2	208.89
510-9020	50 sq. ft. Front Access Skim Filter - Single Port - Oval Style	2	215.71
510-9100	100 sq. ft. Front Access Skim Filter - Single Port	--	270.85
510-6600	100 sq. ft. Front Access Skim Filter - Dual Port	2	273.67
510-6620	100 sq. ft. Front Access Skim Filter - Dual Port - Oval Style	2	284.84
510-6700	200 sq. ft. Front Access Skim Filter - Dual Port	--	400.71
672-5090	100 sq. ft. Skim Filter Manifold Tee with Plug	20	20.34

FEATURES:

- New Roadster grill design
- 50 sq. ft. Cartridges (2) (100 sq. ft. total)
- 2" Spigot Output Ports (2)
- Extra Large 5 ½" x 14" Weir Area
- Extra Large 8" x 14" Basket
- Easy Access to Basket and Cartridges
- Easy Through-Wall Installation

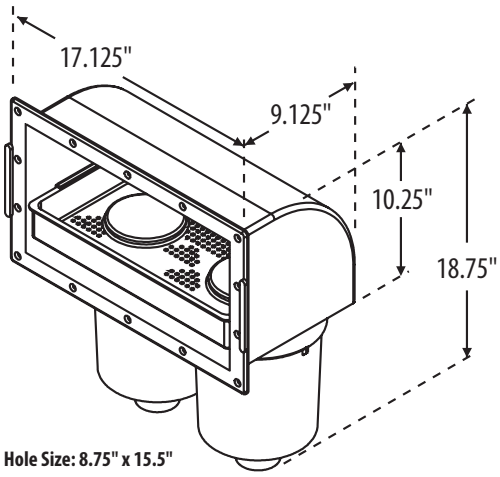

Hole Size: 8.75" x 15.5"

510-6689DSG-PS

100 sq. ft. Front Access Roadster Skim Filter

Part No.	Description	Case Quantity	List (US $)
510-6680	100 sq. ft. Front Access Roadster Skim Filter	--	296.84

FEATURES:

- Cage-style tower eliminates unwanted vortexing
- Safety orientated
- Easily accessible basket for effortless cleaning
- Available in several different filter sizes
- 2" Socket IN/OUT plumbing
- Built in Check Valve
- Hole Saw Size: Ø 6.88"
- Custom logo plate available for volume orders

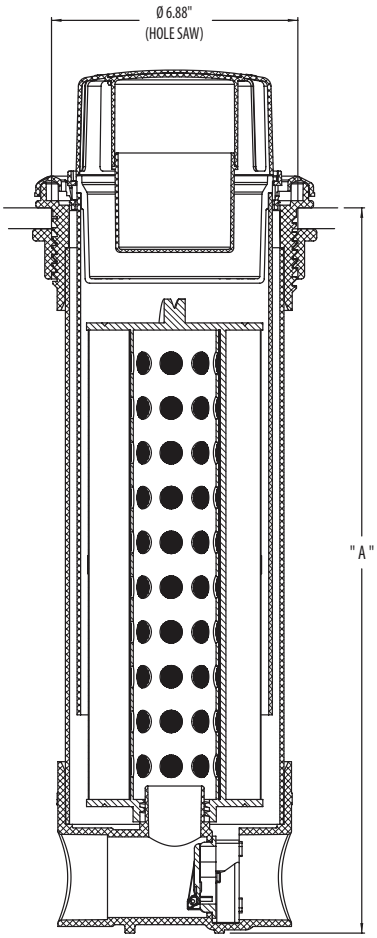

510-4600

For replacement parts, see page 131.

Teleweir Skim Filters

Part No.	Description	"A" Dimension	Case Quantity	List (US $)
510-4630	25 sq. ft. Teleweir Skim Filer	20.25 in.	20	193.58
510-4620	35 sq. ft. Teleweir Skim Filter	16.00 in.	20	203.25
510-4600	50 sq. ft. Teleweir Skim Filter	20.25 in.	20	206.75
510-4590	75 sq. ft. Teleweir Skim Filter	26.38 in.	20	217.26

FEATURES:

- Improved exclusive vent system for added safety
- Exclusive bayonet lock retains the basket and weir
- PVC upper threaded, middle and bottom body components are compatible with PVC glues and most silicones
- New compact sizes
- Traditional 4-scallop escutcheons to match the decor of the spa
- Telescoping weir has 6" of travel
- Built-in restriction valve for improved filtration with low volume
- Two basket sizes
- Dyna-Flo replacement parts fit all existing Dyna-Flo Top-Mount Filters
- Retrofits Dynamic Series Rainbow Skim Filters

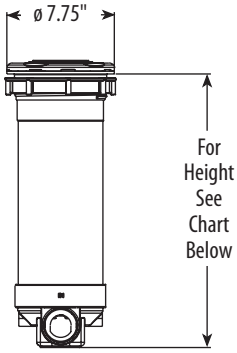

Hole Saw Size 6.875" (All Sizes)

DYNA-FLO PLUS

Low Volume
8 GPM Minimum

Hi Volume
15 GPM Minimum

LOW PROFILE DYNA-FLO

Low Volume
8 GPM Minimum

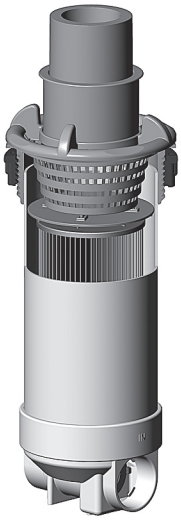

Hi Volume
15 GPM Minimum

For replacement parts, see page 135.

Dyna-Flo Top-Mount Skim Filters

Part No.	Size	Description	Height	List (US $)
510-4520	2" Socket - 25 sq. ft.	Dyna-Flo Plus - Low Volume - 8 GPM Minimum	21 ⅛"	202.12
510-4540	2" Socket - 40 sq. ft.	Dyna-Flo Plus - Low Volume - 8 GPM Minimum	17 ¼"	208.50
510-4550	2" Socket - 50 sq. ft.	Dyna-Flo Plus - Low Volume - 8 GPM Minimum	21 ⅛"	215.25
510-9520	2" Socket - 25 sq. ft.	Dyna-Flo Plus - Hi Volume - 15 GPM Minimum	21 ⅛"	202.12
510-9540	2" Socket - 40 sq. ft.	Dyna-Flo Plus - Hi Volume - 15 GPM Minimum	17 ¼"	208.50
510-9550	2" Socket - 50 sq. ft.	Dyna-Flo Plus - Hi Volume - 15 GPM Minimum	21 ⅛"	215.25
510-3520	2" Socket - 25 sq. ft.	Low Profile Dyna-Flo - Low Volume - 8 GPM Minimum	19 ⅝"	193.58
510-3540	2" Socket - 40 sq. ft.	Low Profile Dyna-Flo - Low Volume - 8 GPM Minimum	15 ¾"	199.97
510-3550	2" Socket - 50 sq. ft.	Low Profile Dyna-Flo - Low Volume - 8 GPM Minimum	19 ⅝"	206.75
510-6520	2" Socket - 25 sq. ft.	Low Profile Dyna-Flo - Hi Volume - 15 GPM Minimum	19 ⅝"	193.58
510-6540	2" Socket - 40 sq. ft.	Low Profile Dyna-Flo - Hi Volume - 15 GPM Minimum	15 ¾"	199.97
510-6550	2" Socket - 50 sq. ft.	Low Profile Dyna-Flo - Hi Volume - 15 GPM Minimum	19 ⅝"	206.75

For textured High-Volume Lock-Ring, add "T" to the end of the part number.

FEATURES:

- Extra-large 10" diameter body for improved filtration
- Extra-large 6 ½" diameter cartridge for larger cartridge sizes
- Exclusive "Vent System" for added safety
- PVC upper, middle and bottom sections are compatible with PVC glues and most silicones
- Available in 50, 75 and 100 sq. ft.
- Adjustable restrictor valve for variable flow control
- Extra-large basket
- Removable bypass valve for easy servicing
- Optional chemical feeder
- Available in 2" or 2 ½" Socket In/Out

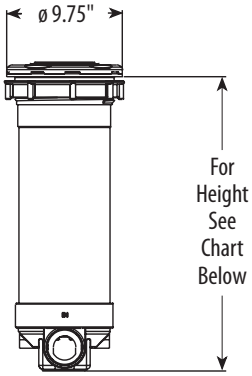

Hole Saw Size 8.5" (All Sizes)

For replacement parts, see page 136.

Dyna-Flo XL Skim Filters

Part No.	Socket Size	Filter Size	Filter Length	List (US $)
512-0270	2"	75 sq. ft.	21 ¾"	282.97
512-0210	2"	100 sq. ft.	26 ¼"	303.23
512-2550	2 ½"	50 sq. ft.	21 ¾"	268.79
512-2570	2 ½"	75 sq. ft.	21 ¾"	282.97
512-2510	2 ½"	100 sq. ft.	26 ¼"	303.23

FEATURES:

- Skims water without the use of a weir
- No moving parts
- Uses the same size hole pattern as our standard Dyna-Flo
- Allows for a larger variance of water levels

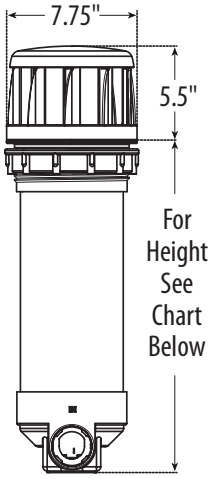

Hole Saw Size 6.875" (All Sizes)

For replacement parts, see page 137.

Ultra Skim Filter

Part No.	Filter Size	Filter Length	List (US $)
514-6550	50 sq. ft.	19 ⅝"	223.13

500-2500

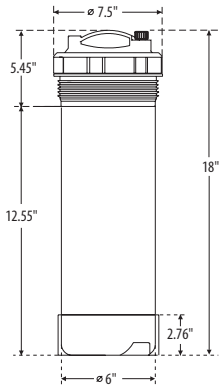

For replacement parts, see page 132.

1 ½" and 2" Top-Load Filters

Part No.	Description	List (US $)
500-2500	1 ½" - 25 sq. ft. Cartridge with Plug	123.18
500-2510	1 ½" - 25 sq. ft. Cartridge with Bypass Valve	145.52
500-2540	1 ½" - 25 sq. ft. Cartridge with Plug and 10-Tablet Brominator	169.50
500-2550	1 ½" - 25 sq. ft. Cartridge with Bypass Valve and 10-Tablet Brominator	169.50
500-5000	1 ½" - 50 sq. ft. Cartridge with Plug	168.20
500-5010	1 ½" - 50 sq. ft. Cartridge with Bypass Valve	168.20
500-5050	1 ½" - 50 sq. ft. Cartridge with Bypass Valve and 10-Tablet Brominator	192.12
500-6010	1 ½" - without Cartridge - with Bypass Valve	137.49
500-6050	1 ½" - without Cartridge - with Bypass Valve and 10-Tablet Brominator	161.41
502-2500	2" - 25 sq. ft. Cartridge with Plug	155.72
502-2510	2" - 25 sq. ft. Cartridge with Bypass Valve	155.72
502-2530	2" - 25 sq. ft. Cartridge with Bypass Valve and Flow Restriction Tube	166.44
502-2550	2" - 25 sq. ft. Cartridge with Bypass Valve and 10-Tablet Brominator	169.50
502-5000	2" - 50 sq. ft. Cartridge with Plug	168.20
502-5010	2" - 50 sq. ft. Cartridge with Bypass Valve	168.20
502-5030	2" - 50 sq. ft. Cartridge with Bypass Valve and Flow Restriction Tube	179.00
502-5050	2" - 50 sq. ft. Cartridge with Bypass Valve and 10-Tablet Brominator	192.12

500-7500

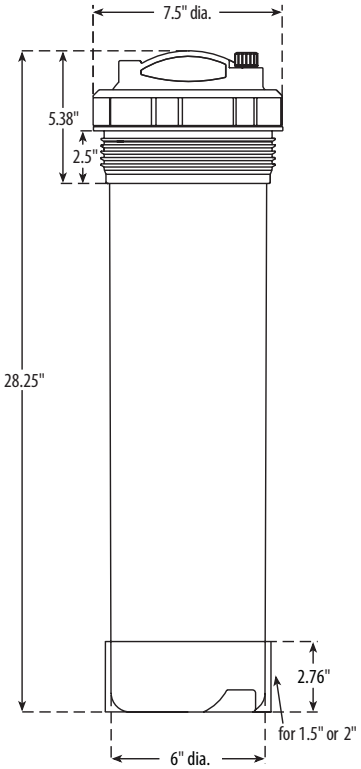

1 ½" Top-Load Extended Filters

Part No.	Description	List (US $)
500-7500	75 sq. ft. Cartridge with Plug	201.35
500-7510	75 sq. ft. Cartridge with Bypass Valve	201.35
500-7550	75 sq. ft. Cartridge with Bypass Valve and 10 Tablet Brominator	225.24
500-9900	100 sq. ft. Cartridge with Plug	211.41
500-9910	100 sq. ft. Cartridge with Bypass Valve	211.41
500-9950	100 sq. ft. Cartridge with Bypass Valve and 10 Tablet Brominator	245.39

2" Top-Load Extended Filters

Part No.	Description	List (US $)
502-7500	75 sq. ft. Cartridge with Plug	201.34
502-7510	75 sq. ft. Cartridge with Bypass Valve	201.34
502-7550	75 sq. ft. Cartridge with Bypass Valve and 10 Tablet Brominator	218.70
502-9900	100 sq. ft. Cartridge with Plug	211.41
502-9910	100 sq. ft. Cartridge with Bypass Valve	211.25

500-1021

400-9140

212-1810

400-9030

212-1820

400-9220

500-1070

640-3170

670-2000

400-9130

640-4220 / 640-4240 / 640-4230

400-9150

Filter Accessories

Part No.	Description	Case Quantity	List (US $)
500-1021	Filter Niche with 2-Cup Holder Lid and Screws - Black	6	27.94
400-9140	Cartridge Mounting Assembly - 1 ½" NPT - with Grate	150	7.34
212-1810	Thru Wall Fitting Assembly - ½" S x ½" S	150	10.80
400-9030	Cartridge Mounting Assembly with Grate - 2" S x 1 ½" Acme	100	13.14
212-1820	Bulkhead Wall Fitting Assembly - ¾" RB	150	10.80
400-9220	Vent Wall Fitting Assembly with Grate *(color matching available)*	50	6.74
500-1070	10-Tablet Brominator Assembly	70	23.91
640-3170	Suction Wall Fitting Assembly with Bypass Valve	40	15.10
400-9120	Cartridge Mounting Assembly - 1 ½" NPT	150	6.74
400-9130	Cartridge Mounting Assembly - 2" NPT	100	13.14
670-2000	Water Nozzle Wall Fitting Assembly	200	6.06
640-4220	Lo-Pro ¾" SB 90° Return Fitting Assembly	40	17.20
640-4240	Lo-Pro ¾" S 90° Return Fitting Assembly	40	17.20
640-4230	Lo-Pro 1" S 90° Return Fitting Assembly	40	17.20
400-9150	Return Wall Fitting Assembly - 1 ½" FPT x 1 ½" S	50	8.38

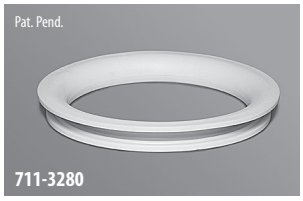

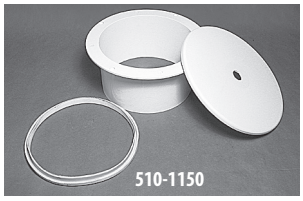

Skim Filter Gaskets

Part No.	Description	Case Quantity	List (US $)
711-3280	Double-Seal Gasket	100	5.91
711-8010	Grommet Gasket	--	4.19

Spa Mounting Plate

Part No.	Description	Case Quantity	List (US $)
550-1600	Spa Skimmer Mounting Plate with Screws	50	12.55

Filter Extensions

Part No.	Description	Case Quantity	List (US $)
510-1150	Filter Extension Assembly	1	26.96
519-2041	Filter Extension - Cover	1	9.43
519-2031	Filter Extension - Body	1	14.82

550-0127

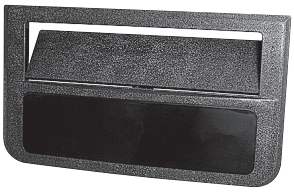
680-2000

550-7760

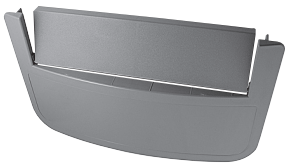
550-5617

Weirs

Part No.	Description	Case Quantity	List (US $)
680-2000	Custom Weir Assembly - 13 ⅛" H x 23 ¼" W *(customized logo & color with quantity order)*	25	150.99
550-7760	Skimmer Frame & Weir Assembly with Waterfall	--	150.99
550-5610	Curved Weir Frame Assembly - 13" H x 20 ¾" W	--	57.33
550-0120	Tiered Weir Frame Assembly	--	77.04

817-2500

817-7500

Replacement Cartridges for In-Line and Top-Load Filters

Part No.	Description	Dimensions	Case Quantity	List (US $)
817-2500	Cartridge - 25 sq. ft.	4 15⁄16" OD x 13 5⁄16" L	--	46.61
817-5000	Cartridge - 50 sq. ft.	4 15⁄16" OD x 13 5⁄16" L	16	67.02
817-7500	Cartridge - 75 sq. ft.	4 15⁄16" OD x 23 5⁄8" L	--	92.32
817-1000	Cartridge - 100 sq. ft.	4 15⁄16" OD x 23 5⁄8" L	--	101.31

Skim Filter Replacement Cartridge

Skim Filter Replacement Cartridges

Part No.	Size	Dimensions	Top Load	Front Access	List (US $)
817-0010	10 sq. ft.	4 1⁄4" outer diameter x 4" L		x	29.32
817-3501	35 sq. ft.	4 15⁄16" outer diameter x 9 1⁄4" L (1 piece)		x	44.22
817-3510	35 sq. ft.	4 15⁄16" outer diameter x 4 5⁄8" L (2 pieces)		x	59.08
817-5010	50 sq. ft.	4 15⁄16" outer diameter x 6 5⁄8" L (2 pieces)		x	68.73
817-0050	50 sq. ft.	6" outer diameter x 8 1⁄4" L		x	66.65
817-0011	50 sq. ft.	6" outer diameter x 8 1⁄4" L (2 pieces upper)		x	66.65
817-0012	50 sq. ft.	6" outer diameter x 8 1⁄4" L (2 pieces lower)		x	66.65
817-2500	25 sq. ft.	5" outer diameter x 13 1⁄4" L	x		46.61
817-5000	50 sq. ft.	5" outer diameter x 13 1⁄4" L (1 piece)	x		67.02
817-0014	50 sq. ft.	5 5⁄16" outer diameter x 10 1⁄8" L	x		73.59
817-0015	75 sq. ft.	5 5⁄16" outer diameter x 14 13⁄16" L	x		92.08
817-7500	75 sq. ft.	5" outer diameter x 23 5⁄8" L (2 pieces)	x		92.32
817-0016	100 sq. ft.	5 5⁄16" outer diameter x 17 13⁄16" L	x		107.31
817-1000	100 sq. ft.	5" outer diameter x 23 5⁄8" L	x		101.31

FEATURES:

- Viper wet end designed specifically for 56-frame motors
- Two double shielded ball bearings with moisture resistant grease for quieter operation and longer life
- Two speed motors have four sets of insulated windings for increased efficiency
- 56-frame motor for added strength, cooler operating temperature and longer motor life
- Large 2 ½" intake for improved flow performance and reduced noise
- Large 8" diameter wet end for increased volume capacity
- Split capacitor, (start and run) for less energy consumption
- Thermally protected to extend life expectancy of motor
- Highly versatile wet end can be rotated every 90°
- Viton seals
- Three year warranty on motor and wet end

Call for available cords and plugs.

For 2-speed models only

For replacement parts, see page 127.

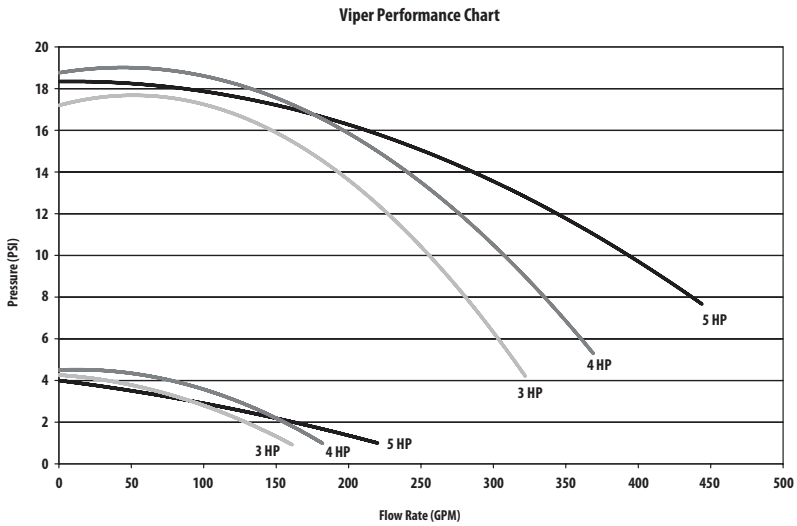

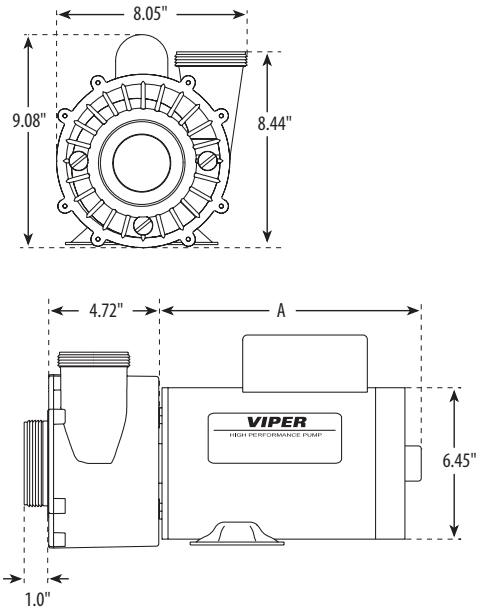

2-Speed Viper 56-Frame Pumps

Part No.	Description	HP	Volts	Amps High Speed	Amps Low Speed	Hz	Dimension "A"	List (US $)
3721221-1T	2 ½" Intake - 2 ½" Discharge	3	230	10	3.5	60	11"	670.84
3721621-1T	2 ½" Intake - 2 ½" Discharge	4	230	12	4.4	60	11"	720.20
3722021-0T	2 ½" Intake - 2 ½" Discharge	5	230	16.4	4.8	60	11"	743.51

1-Speed Viper 56-Frame Pumps

Part No.	Description	HP	Volts	Amps	Hz	Dimension "A"	List (US $)
3711621-0T	2 ½" Intake - 2 ½" Discharge	4	230	12	60	11"	627.21
3712021-0T	2 ½" Intake - 2 ½" Discharge	5	230	16.4	60	11"	627.21

FEATURES:

- Executive wet end designed specifically for 56-frame motors
- Two double shielded ball bearings with moisture resistant grease for quieter operation and longer life
- Two speed motors have four sets of insulated windings for increased efficiency
- 56 frame motor for added strength, cooler operating temperature and longer motor life
- Large 2 ½" intake for improved flow performance and reduced noise
- Large 6 ½" diameter wet end for higher head pressure
- Split capacitor, (start and run) for less energy consumption
- Thermally protected to extend life expectancy of motor
- Highly versatile wet end can be rotated every 90°
- Viton seals
- Three year warranty on motor and wet end

Call for available cords and plugs.

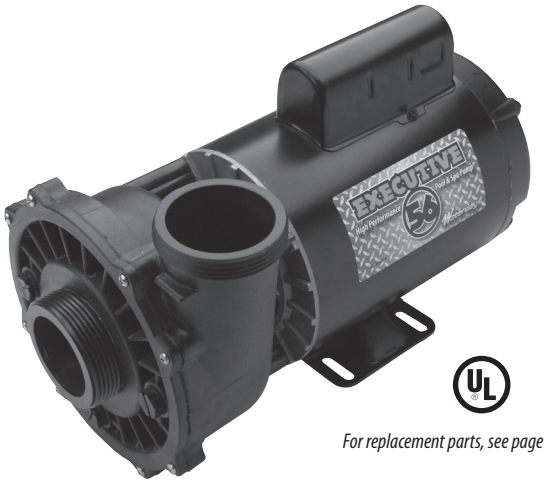

For replacement parts, see page 125.

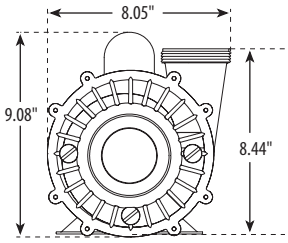

PRESSURE VERSUS FLOW RATE

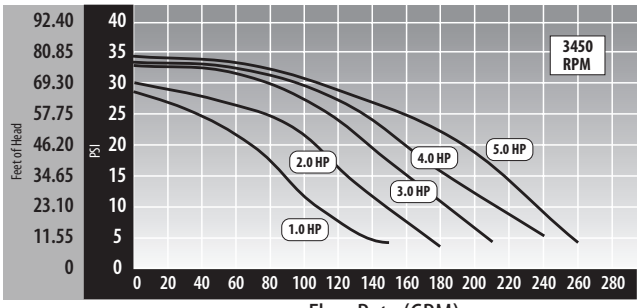

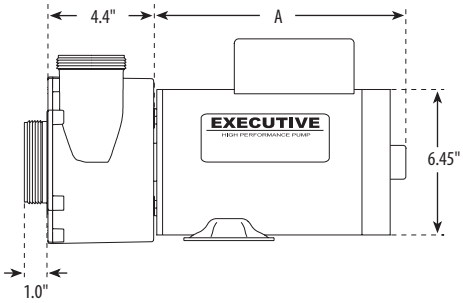

2-Speed Executive 56-Frame Pumps

Part No.	Description	HP	Volts	Amps High Speed	Amps Low Speed	Hz	Dimension "A"	List (US $)
3720821-1D	2" Intake - 2" Discharge	2	230	8.0	3.0	60	8.875"	556.40
3720821-13	2 ½" Intake - 2" Discharge	2	230	8.0	3.0	60	8.875"	556.40
3721221-1D	2" Intake - 2" Discharge	3	230	10.0	3.4	60	9.875"	594.50
3721221-13	2 ½" Intake - 2" Discharge	3	230	10.0	3.4	60	9.875"	594.50
3721621-1D	2" Intake - 2" Discharge	4	230	12.0	4.4	60	10.375"	648.18
3721621-13	2 ½" Intake - 2" Discharge	4	230	12.0	4.4	60	10.375"	648.18
3722021-1D	2" Intake - 2" Discharge	5	230	16.4	4.8	60	10.375"	736.04
3722021-13	2 ½" Intake - 2" Discharge	5	230	16.4	4.8	60	10.375"	736.04

1-Speed Executive 56-Frame Pumps

Part No.	Description	HP	Volts	Amps	Hz	Dimension "A"	List (US $)
3710821-1D	2" Intake - 2" Discharge	2	230	8.0	60	8.875"	556.40
3710821-13	2 ½" Intake - 2" Discharge	2	230	8.0	60	8.875"	556.40
3711221-1D	2" Intake - 2" Discharge	3	230	10.0	60	9.875"	594.50
3711221-13	2 ½" Intake - 2" Discharge	3	230	10.0	60	9.875"	594.50
3711621-1D	2" Intake - 2" Discharge	4	230	12.0	60	10.375"	616.72
3711621-13	2 ½" Intake - 2" Discharge	4	230	12.0	60	10.375"	634.75
3712021-1D	2" Intake - 2" Discharge	5	230	16.4	60	10.375"	634.75
3712021-13	2 ½" Intake - 2" Discharge	5	230	16.4	60	10.375"	643.11

FEATURES:

- Executive wet end designed specifically for 48-frame motors
- Large 2 ½" intake for improved flow performance and reduced noise
- Large 6 ½" diameter wet end for higher head pressure
- Thermally protected to extend life expectancy of motor
- Highly versatile wet end can be rotated every 90°
- Viton seals
- 2-year warranty on motor, 3-year on wet end

Call for available cords and plugs.

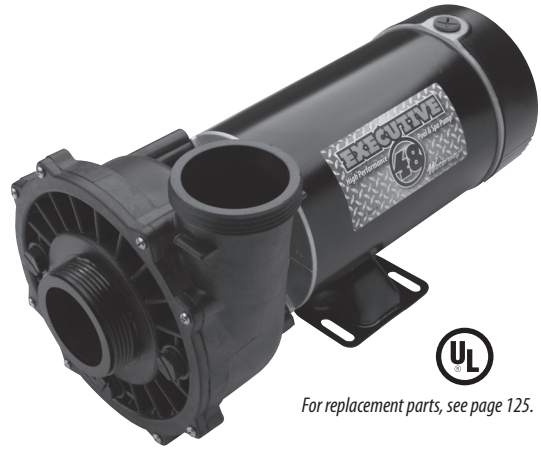

For replacement parts, see page 125.

PRESSURE VERSUS FLOW RATE

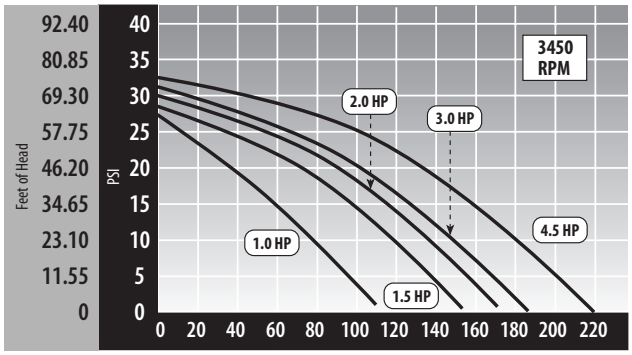

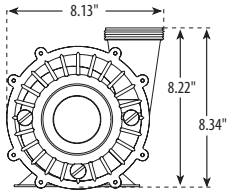

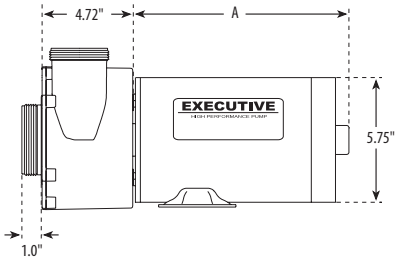

2-Speed Executive 48-Frame Pumps

Part No.	Description	HP	Volts	Amps High Speed	Amps Low Speed	Hz	Dimension "A"	List (US $)
3420410-1A	2" Intake - 2" Discharge	1.0	115	11.0	2.9	60	9.73"	478.37
3420410-13	2 ½" Intake - 2" Discharge	1.0	115	11.0	2.9	60	9.73"	478.37
3420610-1A	2" Intake - 2" Discharge	1.5	115	16.4	4.4	60	10.48"	522.36
3420610-13	2 ½" Intake - 2" Discharge	1.5	115	16.4	4.4	60	10.48"	522.36
3420620-1A	2" Intake - 2" Discharge	1.5	230	8.0	2.6	60	10.45"	522.36
3420620-13	2 ½" Intake - 2" Discharge	1.5	230	8.0	2.6	60	10.45"	522.36
3420820-1A	2" Intake - 2" Discharge	2.0	230	10.5	2.6	60	11.0"	553.47
3420820-13	2 ½" Intake - 2" Discharge	2.0	230	10.5	2.6	60	11.0"	553.47
3421221-1A	2" Intake - 2" Discharge	3.0	230	8.5	2.8	60	11.0"	572.73
3421221-13	2 ½" Intake - 2" Discharge	3.0	230	8.5	2.8	60	11.0"	572.73
3421821-1A	2" Intake - 2" Discharge	4.5	230	12.0	3.5	60	11.98"	645.68
3421821-13	2 ½" Intake - 2" Discharge	4.5	230	12.0	3.5	60	11.98"	645.68

1-Speed Executive 48-Frame Pumps

Part No.	Description	HP	Volts	Amps	Hz	Dimension "A"	List (US $)
3410410-1A	2" Intake - 2" Discharge	1.0	115	12	60	9.23"	413.90
3410610-1A	2" Intake - 2" Discharge	1.5	115	17	60	9.78"	444.78
3410830-1A	2" Intake - 2" Discharge	2.0	115/230	20/10	60	10.98"	509.35
3410830-13	2 ½" Intake - 2" Discharge	2.0	115/230	20/10	60	10.98"	509.35
3411621-1A	2" Intake - 2" Discharge	4.0	230	12	60	11.18"	598.31
3411621-13	2 ½" Intake - 2" Discharge	4.0	230	12	60	11.18"	598.31

EXECUTIVE WET END FEATURES:

- High performance Executive wet end specifically designed for 56-frame motors
- Large 2" intake for improved flow performance and noise reduction
- Large 6" diameter wet end for higher head pressure
- Highly versatile wet end can be rotated every 90°

VIPER WET END FEATURES:

- Ultra high performance Viper wet end specifically designed for 56-frame motors
- Extra large 2 ½" intake for improved flow performance and noise reduction
- Large 8" diameter wet end to move higher volumes of water at lower pressures
- Highly versatile wet end can be rotated every 90°

MOTOR FEATURES:

- Water repellent Italian made EMG motor
- 56-frame motor for added strength, cooler operating temperature and longer motor life
- Two double shielded ball bearings with moisture resistant grease for quieter operation and longer life
- Two-speed motors have four sets of insulated windings for increased efficiency
- Split capacitor, (start and run) for less energy consumption
- Thermally protected to extend life expectancy of motor
- IPX5 construction

PUMP FEATURES:

- TUV listed
- TUV J and J mini plug *(optional)*
- Viton seals
- Three year warranty

PRESSURE VERSUS FLOW RATE

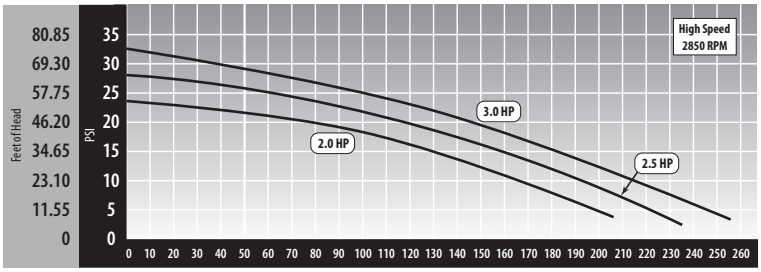

PRESSURE VERSUS FLOW RATE - VIPER EURO PERFORMANCE CHART

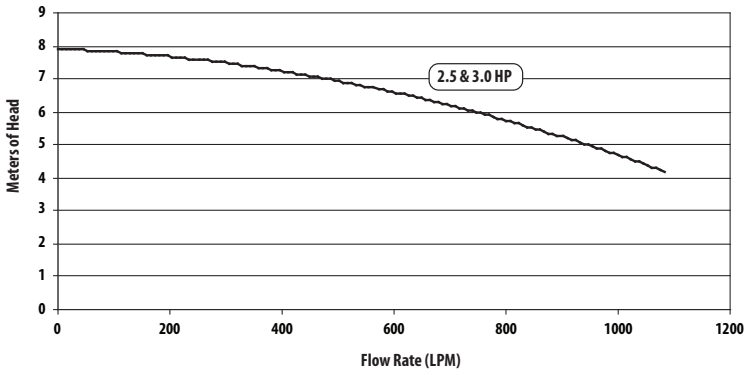

Executive Euro 50 Hz Pumps

Part No.	Description	HP	Speed	Hz	Volts	Amps	List (US $)
3R10850-0D	Executive Euro Pump	2 HP	1-Speed	50	230	8.7	550.91
3R11250-0D	Executive Euro Pump	3 HP	1-Speed	50	230	12.7	558.65
3R20850-0D	Executive Euro Pump	2 HP	2-Speed	50	230	9.3 / 1.8	610.47
3R21050-0D	Executive Euro Pump	2 ½ HP	2-Speed	50	230	10.3 / 1.8	725.75

Viper Euro 50 Hz Pumps

Part No.	Description	HP	Speed	Hz	Volts	Amps	List (US $)
3R11250-0V	Viper Euro Pump	3 HP	1-Speed	50	230	12.3 / 12.8	575.81
3R21050-0V	Viper Euro Pump	2 ½ HP	2-Speed	50	230	11.4	742.92

FEATURES:

- True continuous rated horsepower of 1.5, 2.0, 2.5 and 3.0 HP
- 48-Frame or 56-Frame, Single or Dual Speed (energy saving)
- Use more jets per pump
- Same physical size as Aqua-Flo XP2, XP2e (fits within the same volume envelope)
- Can be used as substitute or retrofit to Aqua-Flo model XP2 or XP2e pumps and similar pumps and wet ends offered by other domestic and foreign suppliers
- Made in USA from highest quality materials with UL and CUL certifications
- CE and TUV certification on export pumps to ensure product performance for you and your customers
- Equipped with the highest quality Viton Seals
- Equipped with high efficiency electrical motors, custom designed for Spa applications

Call for available cords and plugs.

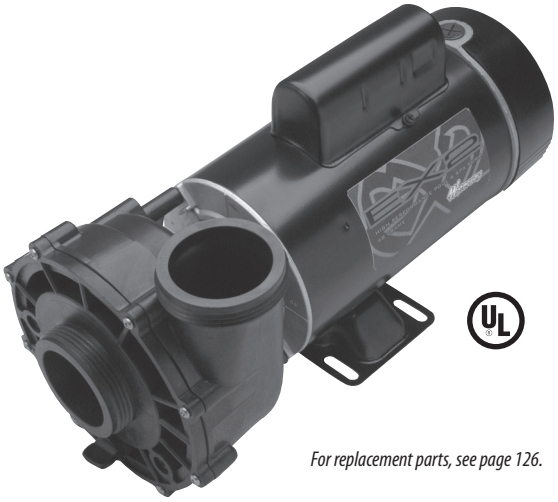

For replacement parts, see page 126.

EX2 Performance Chart

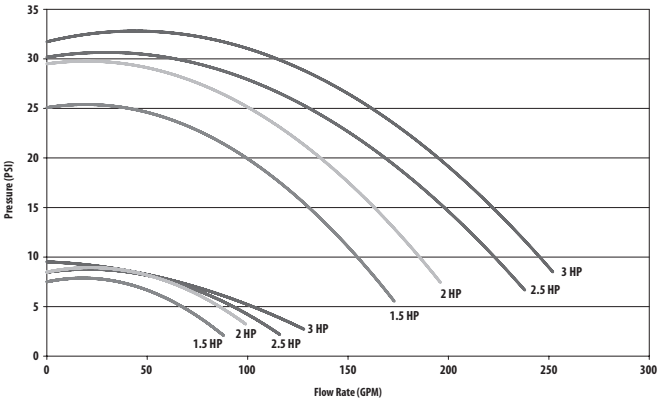

2-Speed EX 2 48-Frame Pumps

Part No.	Description	HP - Full	Volts	Amps High Speed	Amps Low Speed	Hz	List (US $)
3420610-1U	2" Intake - 2" Discharge	1.5	115	16.4	4.4	60	522.36
3420820-1U	2" Intake - 2" Discharge	2	230	10.5	2.6	60	553.47
3421021-1U	2" Intake - 2" Discharge	2	230	9.0	2.8	60	508.10
3421221-1U	2" Intake - 2" Discharge	2	230	8.5	2.8	60	572.73
3421020-1U	2" Intake - 2" Discharge	2.5	230	11.0	3.3	60	593.76
3421821-1U	2" Intake - 2" Discharge	3	230	12.0	3.5	60	645.68

1-Speed EX 2 48-Frame Pumps

Part No.	Description	HP - Full	Volts	Amps	Hz	List (US $)
3410610-1U	2" Intake - 2" Discharge	1.5	115	17.0	60	444.78
3411020-1U	2" Intake - 2" Discharge	2.5	230	10.0	60	595.98
3411621-1U	2" Intake - 2" Discharge	3.0	230	12.0	60	598.31

2-Speed EX 2 56-Frame Pumps

Part No.	Description	HP - Full	Volts	Amps High Speed	Amps Low Speed	Hz	List (US $)
3720821-1W	2" Intake - 2" Discharge	2	230	8.0	3.0	60	556.40
3721220-1W	2" Intake - 2" Discharge	2.5	230	11.0	3.3	60	598.39
3721621-1W	2" Intake - 2" Discharge	3.0	230	12.0	4.4	60	648.12
3M21621-1W	2" Intake - 2" Discharge	3.0	230	12.0	4.4	60	648.12

1-Speed EX 2 56-Frame Pumps

Part No.	Description	HP - Full	Volts	Amps	Hz	List (US $)
3711621-1W	2" Intake - 2" Discharge	3.0	230	12.0	60	616.72

FEATURES:

- High volume side discharge efficiency
- 60% more efficient than our center discharge pumps
- 2" intake and discharge
- Wet end can be rotated for easy installation
- Available in 1 to 4 HP, 1 or 2 speed
- Large 6 ½" diameter wet end for higher head pressure
- Viton Seals
- 18 month warranty

For replacement parts, see page 129.

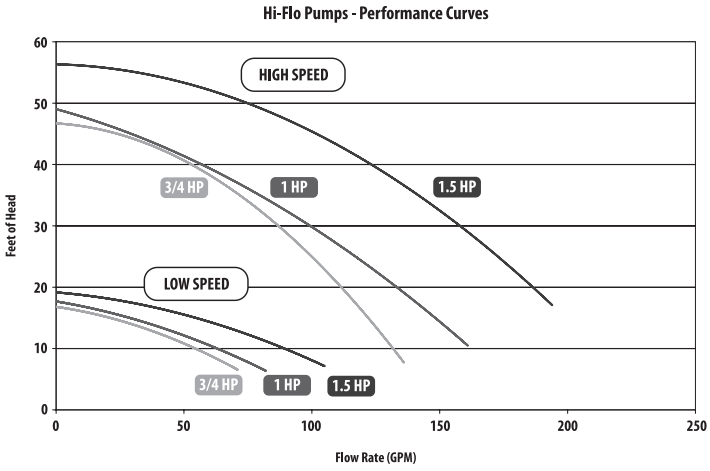

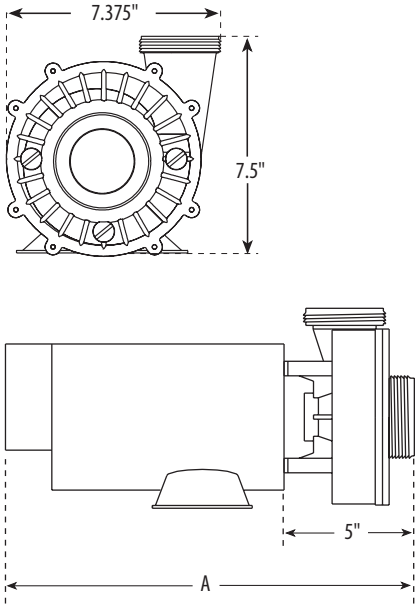

2-Speed Hi-Flo Side Discharge 48-Frame Pumps

Part No.	HP	Volts	Amps High Speed	Amps Low Speed	Hz	Dimension "A"	List (US $)
3420410-10	1.0	115	11.0	2.9	60	14.73"	478.37
3420610-10	1.5	115	16.4	4.4	60	15.48"	522.36
3420620-10	1.5	230	8.0	2.6	60	15.48"	522.36
3420820-10	2.0	230	10.5	2.6	60	16.00"	553.47
3421221-10	3.0	230	8.5	2.8	60	16.00"	572.73
3421621-10	4.0	230	12.0	3.5	60	16.98"	645.68

1-Speed Hi-Flo Side Discharge 48-Frame Pumps

Part No.	HP	Volts	Amps	Hz	Dimension "A"	List (US $)
3410410-10	1.0	115	12.0	60	14.23"	413.90
3410612-10	1.5	115	17.0	60	14.78"	413.90
3410830-10	2.0	115/230	20-10	60	14.98"	509.35
3411621-10	4.0	230	12.0	60	15.18"	598.31

FEATURES:

- 48-frame proven design
- Designed for direct replacement in most spas
- Viton seals
- 1 ½" Intake and Discharge

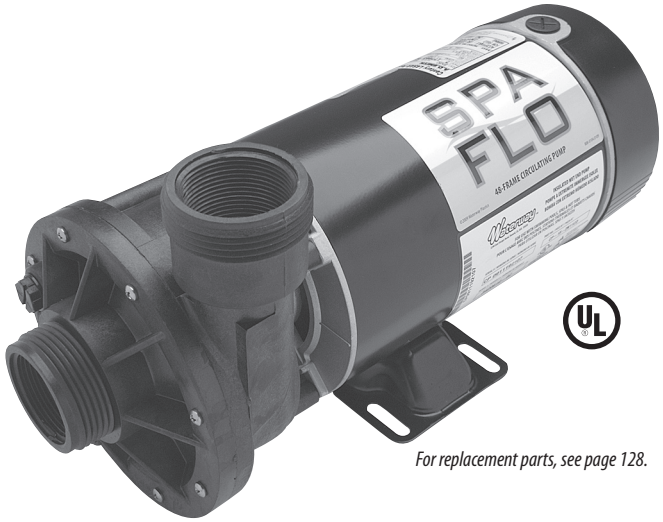

For replacement parts, see page 128.

PRESSURE VERSUS FLOW RATE

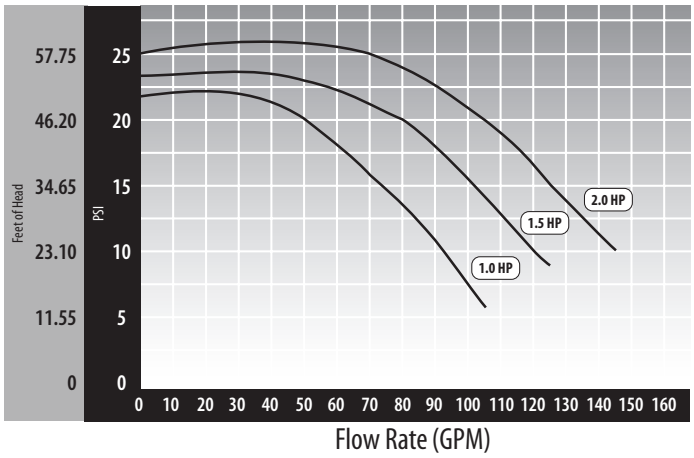

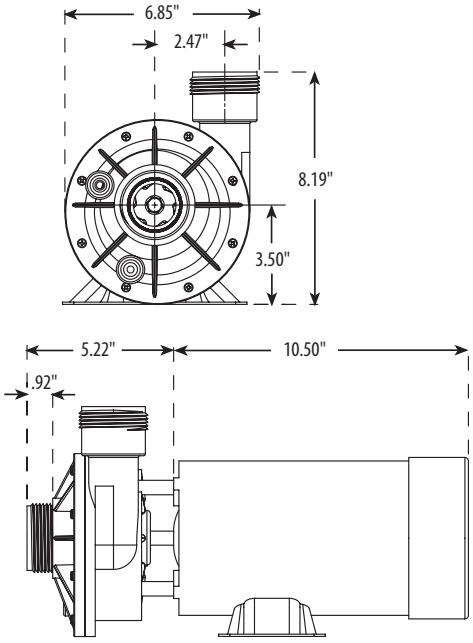

2-Speed Spa Flo 48-Frame Pumps					
Part No.	HP	Volts	Hz	Case Quantity	List (US $)
3420410-0Z	1	115	60	1	614.54
3420610-0Z	1 ½	115	60	1	629.52
3420820-0Z	2	230	60	1	666.80

Sold without cords. Please call for available cords.

1-Speed Spa Flo 48-Frame Pumps					
Part No.	HP	Volts	Hz	Case Quantity	List (US $)
3410410-0Z	1	115	60	1	487.12
3410610-0Z	1 ½	115	60	--	577.06
3410830-0Z	2	115 / 230	60	1	614.54

Sold without cords. Please call for available cords.

FEATURES:

- Reliable center discharge performance
- 1 ½" intake and discharge
- Wet end can be rotated for easy installation
- Available in ¾ to 2 HP, 1 or 2 speed
- Viton Seals
- 18 month warranty

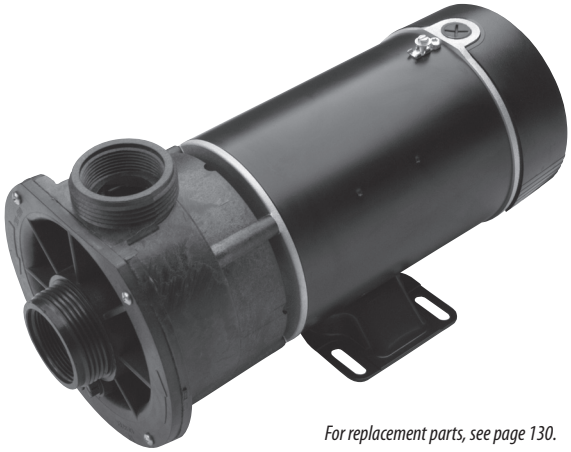

For replacement parts, see page 130.

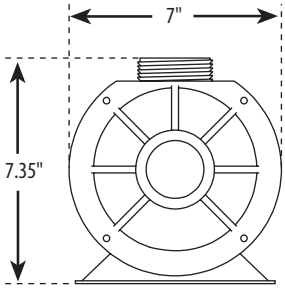

PRESSURE VERSUS FLOW RATE

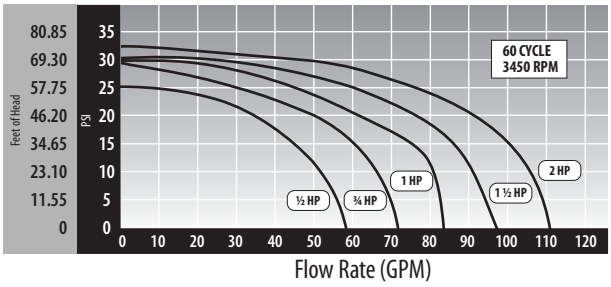

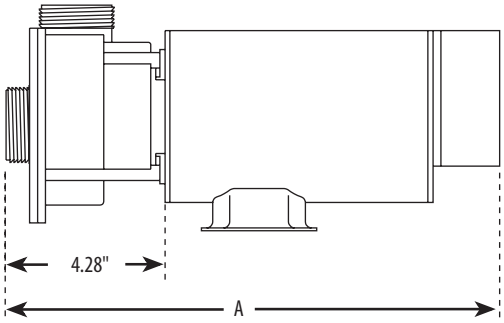

2-Speed Center Discharge Spa Pumps

Part No.	HP	Volts	Amps High Speed	Amps Low Speed	Hz	Dimension "A"	List (US $)
3420310-15	¾	115	8.8	2.6	60	15.00"	456.99
3420410-15	1.0	115	11.0	2.9	60	15.00"	478.37
3420610-15	1.5	115	16.4	4.4	60	15.75"	522.36
3420620-15	1.5	230	8.0	2.6	60	15.73"	522.36
3420820-15	2.0	230	10.5	2.6	60	16.28"	553.47

1-Speed Center Discharge Spa Pumps

Part No.	HP	Volts	Amps	Hz	Dimension "A"	List (US $)
3410310-15	¾	115	9.8	60	14.00"	395.68
3410410-15	1.0	115	12.0	60	14.50"	413.40
3410610-15	1.5	115	17.0	60	15.05"	444.78
3410830-15	2.0	115/230	20-10	60	16.26"	509.35

FEATURES:

- Universal Input Volute
  (Can be rotated to 12:00,3:00,6:00, or 9:00 positions)
- 24-hour circulation
- 48-Frame proven design
- Side Discharge for optimum performance
- ⅛ HP
- Low power usage (0.8/1.6 amps)
- Viton seals
- 1 ½" Union In/Out
- One year limited warranty

PRESSURE VERSUS FLOW RATE

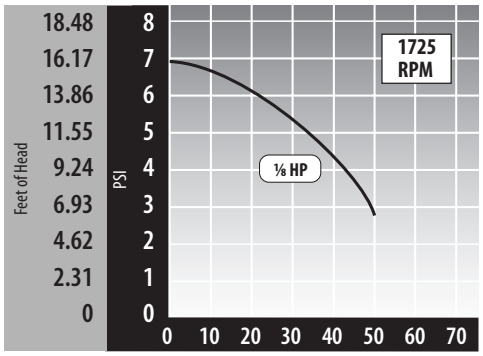

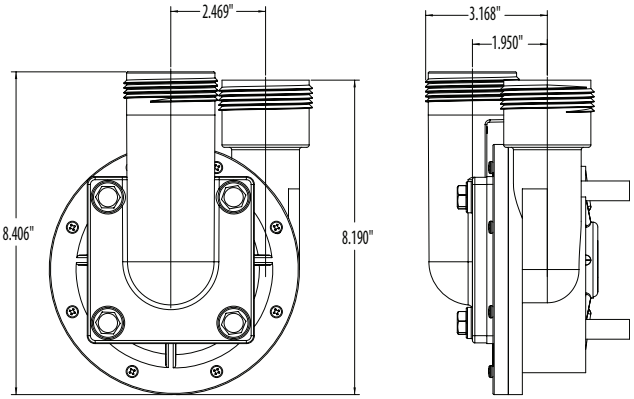

Uni-Might Pumps

Part No.	Description	HP	Volts	Amps	Hz	List (US $)
3410030-0X	Uni-Might Pump	⅛	115	1.6	50/60	314.18
3410020-0X	Uni-Might Pump	⅛	230	0.8	50/60	314.18

Uni-Might Wet End

Part No.	Description	Rating	List (US $)
310-5070	Uni-Might Wet End	⅛	95.39

FEATURES:

- 24-hour circulation
- 48-frame proven design
- Side discharge for optimum flow
- Multiple union assemblies available
- Delivers 40 GPM
- ⅛ HP
- Only 1.3 Amps
- Viton seals
- 1 ½" Intake and Discharge
- One year warranty

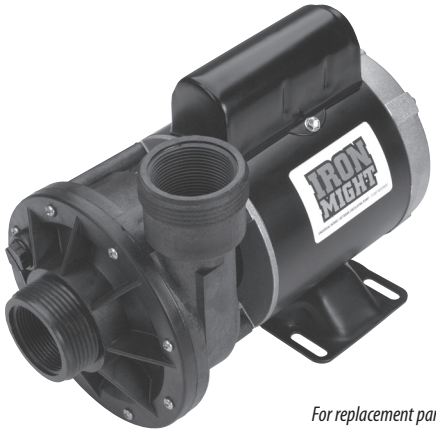

For replacement parts, see page 128.

PRESSURE VERSUS FLOW RATE

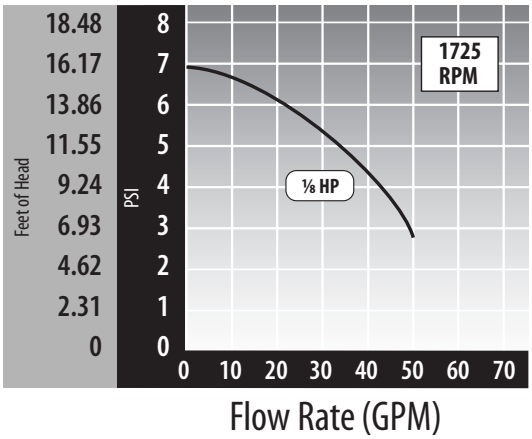

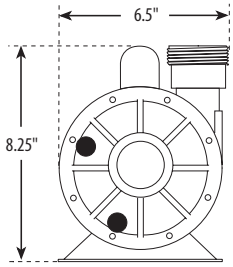

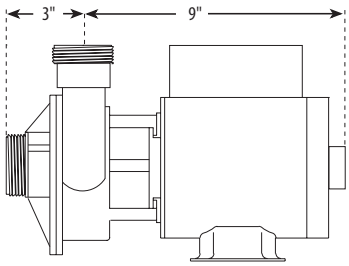

Iron Might 1-Speed 48-Frame Circulating Pumps

Part No.	HP	Volts	Hz	Case Quantity	List (US $)
3410020-1E	⅛	230	60	1	317.43
3410030-1E	⅛	115	60	1	317.43

Leaf Trap *(sold separately)*

Part No.	Description	Case Quantity	List (US $)
310-5400	Leaf Trap – 1 ½" Union x 1 ½" FPT	5	74.47

3410030-1E77

Pond Pump - Iron Might with Trap

Part No.	Description	List (US $)
3410030-1E77	⅛ HP - 115V - 6 ft. NEMA Cord	402.09

FEATURES:

- High volume side discharge efficiency
- 60% more efficient than our center discharge pumps
- Side discharge for optimum flow
- 1" union or 1" barb
- Wet end can be rotated for easy installation
- 1⁄16 HP
- Large 6 ½" diameter wet end for higher head pressure
- One year warranty

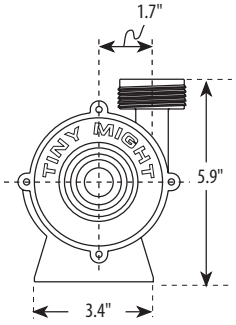

PRESSURE VERSUS FLOW RATE

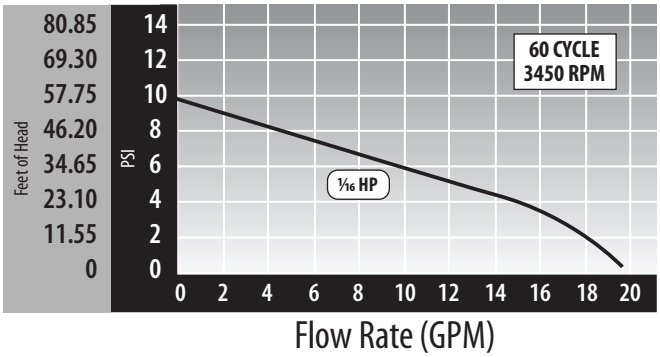

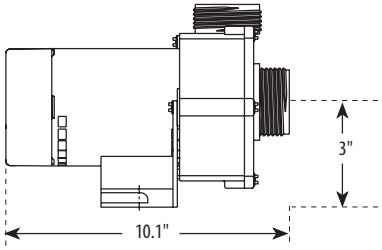

Tiny Might Circulating Pumps						
Part No.	Description	HP	Volts	Amps	Hz	List (US $)
3312610-14	1" Union x 1" Union	1⁄16	115	0.8	60	295.88
3312620-14	1" Union x 1" Union	1⁄16	230	0.4	50/60	295.88
3312610-19	1" Barb x 1" Barb	1⁄16	115	0.8	60	295.88
3312620-19	1" Barb x 1" Barb	1⁄16	230	0.4	50/60	295.88

310-0700

310-0140

Spa Flo Wet Ends

Part No.	Rating	Case Quantity	List (US $)
310-0700	1 HP	--	87.75
310-0800	1 ½ HP	15	87.75
310-0810	2 HP	15	87.75

2 ½" Viper Wet Ends

Part No.	Motor	Rating	Case Quantity	List (US $)
310-0140	56-Frame	4 HP	8	105.42

EX2 Wet Ends

Part No.	Motor	Rating	Case Qty.	List (US $)
310-2450	48-Frame	1 ½ HP	8	105.42
310-2460	48-Frame	2 HP	8	105.42
310-2480	48-Frame	3 HP	8	105.42

Part No.	Motor	Rating	Case Qty.	List (US $)
310-2360	56-Frame	1 ½ HP	15	105.42
310-2370	56-Frame	2 HP	15	105.42
310-2380	56-Frame	3 HP	15	105.42
310-2390	56-Frame	2 ½ HP	15	105.42

310-2360

2" Executive Wet Ends

Part No.	Motor	Rating	Case Qty.	List (US $)
310-1870	48-Frame	1 HP	8	105.42
310-1880	48-Frame	1 ½ HP	8	105.42
310-1890	48-Frame	2 HP	8	105.42
310-1900	48-Frame	3 HP	8	105.42
310-1910	48-Frame	4 HP	8	105.42
310-1920	48-Frame	4 ½ HP	8	105.42
310-1930	48-Frame	5 HP	8	105.42

Part No.	Motor	Rating	Case Qty.	List (US $)
310-1710	56-Frame	1 HP	8	105.42
310-1720	56-Frame	2 HP	8	105.42
310-1730	56-Frame	3 HP	8	105.42
310-1740	56-Frame	4 HP	8	105.42
310-1750	56-Frame	5 HP	8	105.42

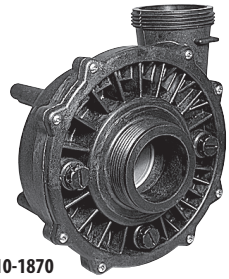

310-1870

2 ½" Executive Wet Ends

Part No.	Motor	Rating	Case Qty.	List (US $)
310-1800	48-Frame	1 HP	8	105.42
310-1810	48-Frame	1 ½ HP	8	105.42
310-1820	48-Frame	2 HP	8	105.42
310-1840	48-Frame	3 HP	8	105.42
310-1860	48-Frame	4 HP	8	105.42
310-1850	48-Frame	4 ½ HP	8	105.42
310-1830	48-Frame	5 HP	8	105.42

Part No.	Motor	Rating	Case Qty.	List (US $)
310-1460	56-Frame	1 HP	8	105.42
310-1480	56-Frame	2 HP	8	105.42
310-1500	56-Frame	3 HP	8	105.42
310-1440	56-Frame	4 HP	8	105.42
310-1510	56-Frame	5 HP	8	105.42

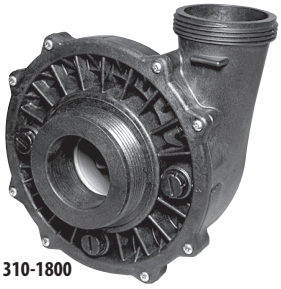

310-1800

2" Hi-Flo Side Discharge Wet Ends

Part No.	Rating	Case Qty.	List (US $)
310-1130SD	1 HP	15	105.42
310-1140SD	1 ½ HP	15	105.42
310-1141SD	2 HP	15	105.42
310-1150SD	3 HP	15	105.42
310-1160SD	4 HP	15	105.42

1 ½" Center Discharge Wet Ends

Part No.	Rating	Case Qty.	List (US $)
310-1120	¾ HP	12	101.36
310-1130	1 HP	12	101.36
310-1140	1 ½ HP	12	101.36
310-1141	2 HP	12	101..36

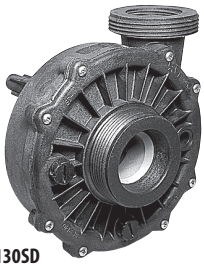

310-1130SD

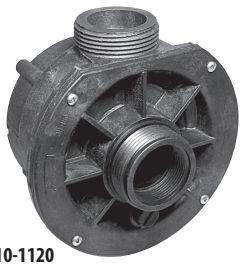

310-1120

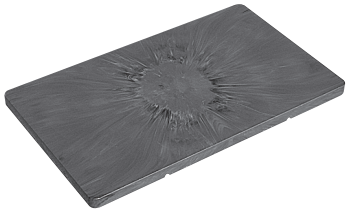
672-1000

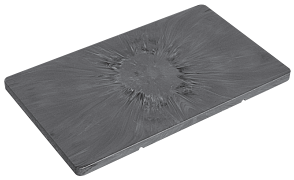
672-1010

672-1060

Equipment Bases

Part No.	Description	Case Quantity	List (US $)
672-1000	1" x 15 ¼" x 26 ¼"	100	35.23
672-1010	1" x 14 ½" x 15"	200	28.92
672-1060	1" x 8 ½" x 15 ½"	16	13.86

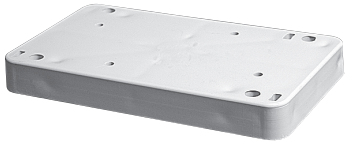
672-1030

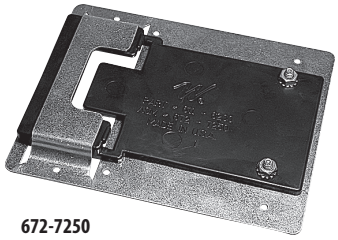
672-7250

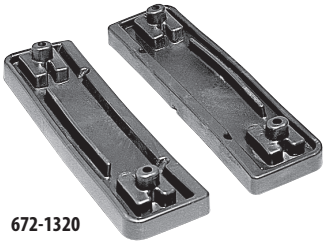
672-1320

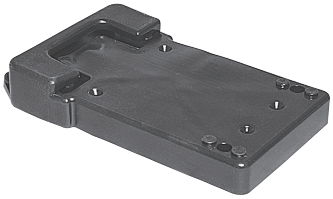
672-1100

672-1020

319-0019

48-Frame Motor Bases

Part No.	Description	Case Quantity	List (US $)
672-1030	½" Thick Base	170	8.80
672-7250	Metal Pump Base Assembly - 7 ½" x 5 5⁄16"	25	13.00
672-1320	Rubber EMG Euro Motor Base *(sold as a pair)*	80	3.84
672-1100	¾" Thick Base with Tabs - PVC Flex	100	13.72
672-1020	¾" Thick Base	170	11.32
672-1080	¾" Thick Base - PVC Flex	50	11.32
319-0019	Self-Aligning Rubber Motor Base	100	5.13

NEW

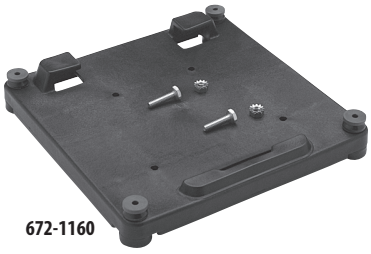
672-1160

FEATURES:

- Fits most domestic and European pump motors (One size fits all!)
- Rubber isolation boots – isolate motor vibration
- EZ front load lock system – allows for easy installation and servicing
- Made of durable impact resistant Polypropylene material

Universal Floating 9" x 9" Pump Base

Part No.	Description	Case Quantity	List (US $)
672-1160	Universal Floating 9" x 9" Pump Base Assembly	25	13.00

NEW

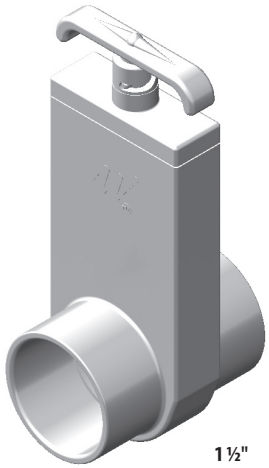

1 ½"

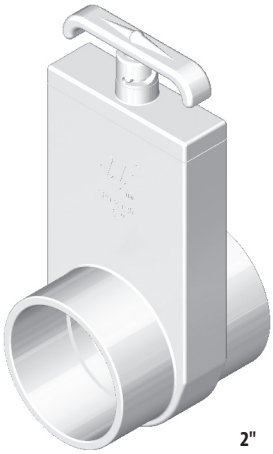

2"

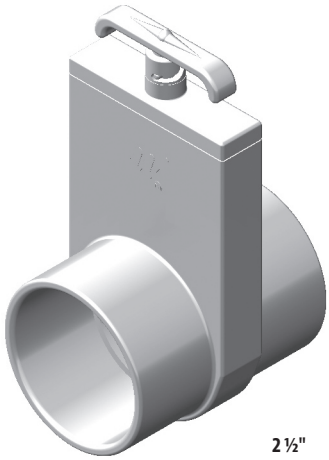

2 ½"

808-2599 808-2099 808-1599

Slice Valves

Part No.	Description	List (US $)
880-1500	1 ½" Slice Valve - 1 ½" S x 1 ½" Spigot	15.11
880-1510	1 ½" Slice Valve - 1 ½" Spigot x 1 ½" Spigot	15.11
880-2020	2" Slice Valve - 2" S x 2" S	18.88
880-2010	2" Slice Valve - 2" Spigot x 2" Spigot	18.88
880-2000	2" Slice Valve - 2" Spigot x 2" S	18.88
880-2500	2 ½" Slice Valve - 2 ½" S x 2 ½" Spigot	29.18
880-2520	2 ½" Slice Valve - 2 ½" S x 2 ½" S	29.18
880-1599	Clip for 1 ½" Slice Valve	0.69
880-2099	Clip for 2" Slice Valve	0.87
880-2599	Clip for 2 ½" Slice Valve	1.03

FEATURES:

- Adjustable flow control
- Easy to adjust in tight places
- Requires less overhead space to turn on/off compared to slice valve
- 100% shut off
- No metal parts in contact with the water for a non-corrosive gate valve
- Waterway manufacturers all TruSeal Gate Valves in the U.S.A.

Gate Valves

Part No.	Description	Color	Case Quantity	List (US $)
600-2370	Gate Valve – 2" S x 2" S	Clear	20	26.14
600-2380	Gate Valve – 2" S x 2" Spigot	Clear	20	26.14
600-2300	Gate Valve – 2 ½" S x 2 ½" Spigot	Clear	18	27.42
600-2340	Gate Valve – 3" S x 3" S	Clear	15	33.56
600-2350	Gate Valve – 3" S x 3" Spigot	Clear	15	33.56

600-8140

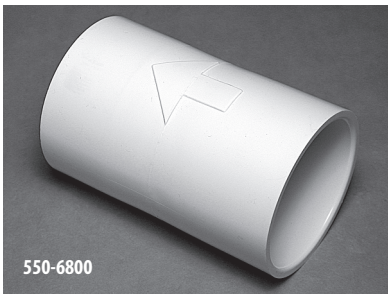
550-6800

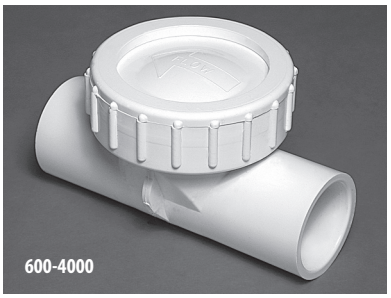
600-4000

670-1100

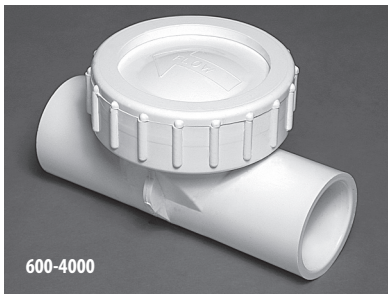
600-4000

600-5080

Check Valves

Part No.	Description	Case Quantity	List (US $)
600-8140	Air Check Valve - ¼ lb. Spring - 1 ½" S x 1 ½" S	50	16.19
600-8160	Air Check Valve - ¼ lb. Spring - 2" Spigot x 2" Spigot	50	17.00
600-8150	Water Bypass Valve - 8 lb. Spring - 1 ½" S x 1 ½" S *(standard color is black)*	50	22.46
550-6810	Flapper Check Valve Body - 1.25 - 2 lbs. Spring - 2" S x 2" S	72	11.63
550-6800	Flapper Check Valve Body - 2.5 - 8 lbs. Spring - 2" S x 2" S	72	11.63
600-4000	Flapper Check Valve - Tee - 1" S x 1" S *(standard color is white)*	80	13.91
600-5000	Check Valve Assembly - Tee - 1" S x 1" S	140	8.16
600-5080	Cross Check Valve Assembly - 3/4" Smooth Barb	60	6.13
NEW **670-1100**	1" Check Valve with Flapper Assembly		4.33

429-4000

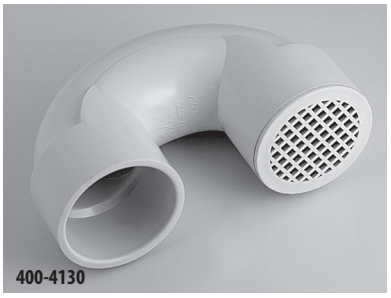
400-4130

U-Bends

Part No.	Description	Case Quantity	List (US $)
429-4000	U-Bend - 1 ½" S x 1 ½" S	50	6.11
429-4030	U-Bend - 2" S x 2" S	40	9.08
400-4130	2" Sweep Vent Grate Assembly	12	9.48

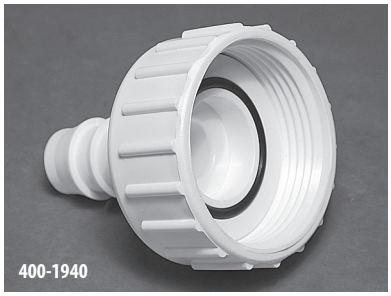
400-1940

400-1950

400-1990

1" Pump Union Assemblies

Part No.	Description	Case Quantity	List (US $)
400-1940	1" Union Nut with ¾" RB Tailpiece and O-Ring	25	3.49
400-1950	1" Union Nut with ½" S Tailpiece and O-Ring	70	3.49
400-1960	1" Union Nut with ¾" S Tailpiece and O-Ring	150	3.49
400-1970	1" Union Nut with 1" RB Tailpiece and O-Ring	40	3.49
400-1990	1" S Union Nut with 1" Slip Tailpiece and O-Ring	200	3.49

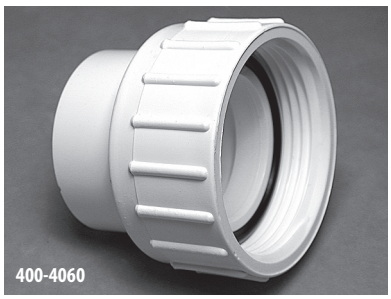
400-4060

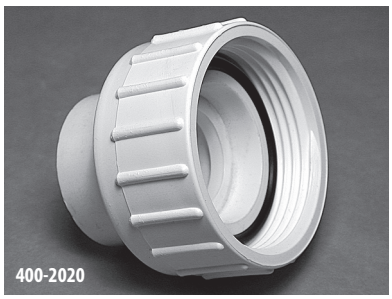
400-2020

400-2010

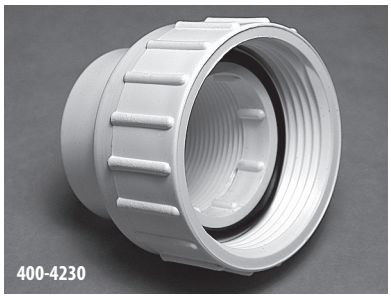
400-4230

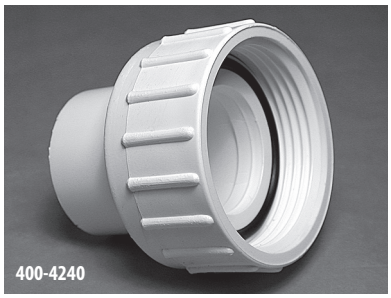
400-4240

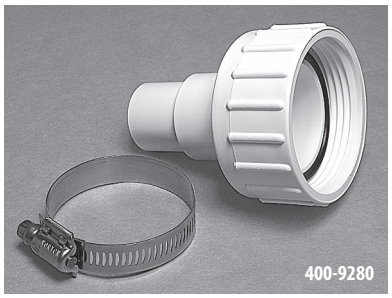
400-9280

1 ½" Pump Union Assemblies

Part No.	Description	Case Quantity	List (US $)
400-4060	1 ½" Union Nut with 1 ½" S Tailpiece and O-Ring	200	4.19
400-5640	1 ½" Union Nut with 1 ½" S Tailpiece and O-Ring with Gasket	200	4.44
400-2020	1 ½" Union Nut with 1 ½" Spigot / 1" S Tailpiece and O-Ring	200	5.23
400-2010	1 ½" Union Nut with 50mm S Tailpiece and O-Ring	35	5.23
400-4230	1 ½" Union Nut with 1 ½" FPT Tailpiece and O-Ring	200	7.84
400-4510	1 ½" Union Nut with 1 ½" FPT Tailpiece and O-Ring with Gasket	200	8.10
400-4240	1 ½" Union Nut with 1 ½" Spigot Tailpiece and O-Ring	50	6.54
400-9280	1 ½" Union Nut with 1 ½" / 1 ¼" Hose Adapter and O-Ring	25	4.40

400-5570

400-9240

400-5800

400-5660

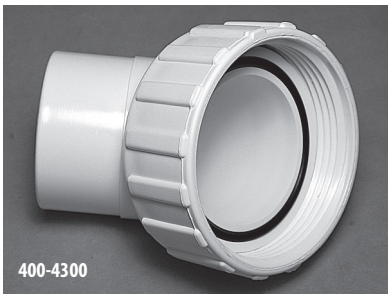
400-4300

400-9230

2" Pump Union Assemblies

Part No.	Description	Case Quantity	List (US $)
400-5570	2" Union Nut with 2" S Tailpiece and O-Ring	140	6.29
400-5670	2" Union Nut with 2" S Tailpiece and O-Ring with Gasket	140	6.54
400-9240	2" Union Nut with 1 ½" Hose Adapter and O-Ring	30	9.06
400-5800	2" Union Nut with 2" S Sweep Ell - 90° Tailpiece	40	8.16
400-5660	2" Union Nut with 1 ½" FPT Nut Tailpiece and O-Ring	72	11.32
400-4300	2" Union Nut with 2" Spigot 45° Tailpiece and O-Ring	70	6.96
400-9230	2" Union Nut with 2" Spigot / 1 ½" S Tailpiece and O-Ring	40	6.29
400-5680	2" Union Nut with 2" Spigot / 1 ½" S Tailpiece and O-Ring with Gasket	140	6.54

400-5990

400-6010

2 ½" Pump Union Assemblies

Part No.	Description	Case Quantity	List (US $)
400-5990	2 ½" Union Nut with 2" S Tailpiece and O-Ring	100	8.87
400-6010	2 ½" Union Nut with 2 ½" S Tailpiece and O-Ring	72	8.87
400-6021B	2 ½" Union Nut x 2 ½" S - Black *(2 included with SVL56 pump)*	72	9.95
400-5971B	2 ½" Union Nut x 2" S - Black *(2 included with SVL56 pump)*	72	9.95

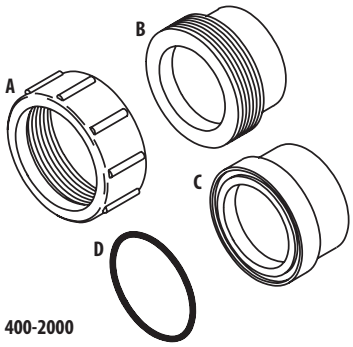

400-2000

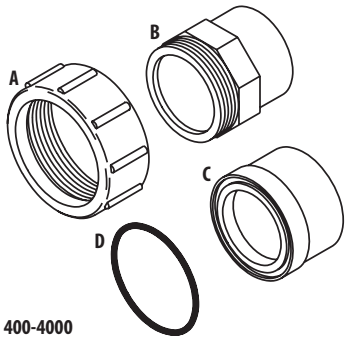

400-4000

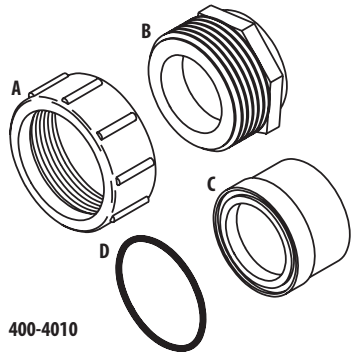

400-4010

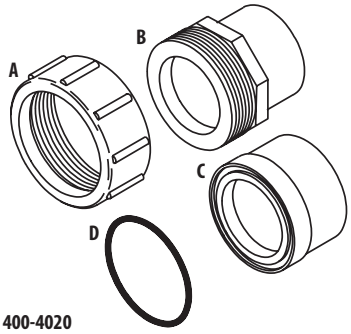

400-4020

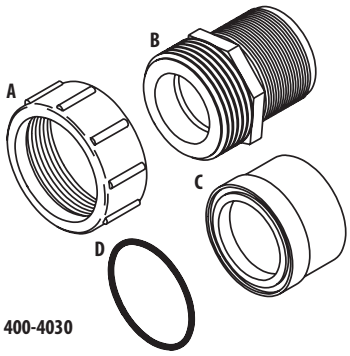

400-4030

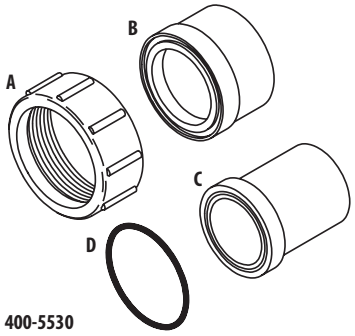

400-5530

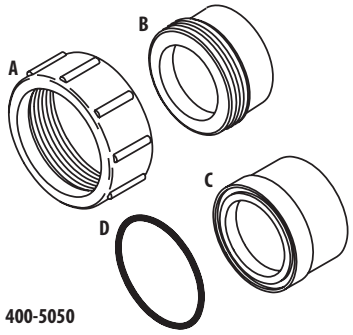

400-5050

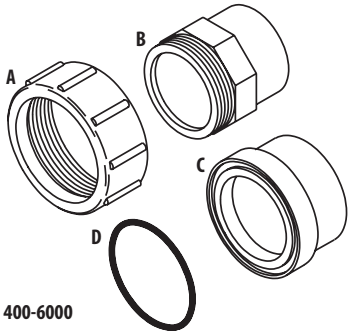

400-6000

Union Assemblies

Part No.	Description	Part A	Part B	Part C	Part D	Case Quantity	List (US $)
400-2000	Union Assembly - 1" S x 1" S	415-2000	417-2010	417-2020	805-0123	60	6.74
400-4000	Union Assembly #1 - 1 ½" S x 1 ½" S	415-4000	417-4010	417-4000	805-0226	100	6.74
400-4010	Union Assembly - 1 ½" S x 1 ½" S - Short	415-4000	417-4020	417-4000	805-0226	50	9.44
400-4020	Union Assembly #3 - 1 ½" S x 1 ½" Spigot	415-4000	417-4030	417-4000	805-0226	25	9.44
400-4030	Union Assembly - 1 ½" MPT x 1 ½" S	415-4000	417-4060	417-4000	805-0226	25	9.44
400-5530	Union Assembly - 2" Spigot / 1 ½" S x 1 ½" S	415-4000	417-4000	417-5080	805-0226	40	9.47
400-5050	Union Assembly #13 - 2" S x 2" S	415-5000	417-5040	417-5120	805-0229	25	10.80
400-6000	Union Assembly - 2 ½" S x 2 ½" S	415-6000	417-6010	417-6000	805-0232	36	13.86

Standard color is white. All fittings meet or exceed A.S.T.M. Schedule 40 standards.

400-4480

Swivel Union Assembly

Part No.	Description	Case Weight	Case Quantity	List (US $)
400-4480	Swivel Union Assembly - 2" S x 2" Spigot	34.56 lbs.	45	22.99

400-5090

400-3090

400-5200

Self-Aligning Union Assemblies

Part No.	Description	Case Weight	Case Quantity	List (US $)
400-5090	Self-Aligning Union Assembly - 2" S x 2" S	32 lbs.	80	10.71
400-3090	Self-Aligning Union Assembly - 1 ½" S x 1 ½" S	34.8 lbs.	80	9.32
400-5200	Self-Aligning Union Assembly - 1 ½" S x 2" S	34.8 lbs.	80	10.15

400-3070

400-4160

400-5080

Union Assemblies

Part No.	Description	Case Weight	Case Quantity	List (US $)
400-3070	Barbed Union Hose Adapter - 1 ½" NPT x 1 ½" *(includes cap for winterization)*	10 lbs.	30	10.83
400-4160	Union Assembly #23 - 1 ½" FPT x 1 ½" S	10.47 lbs.	25	10.80
400-5080	Union Assembly - 2" S x 2" MPT	35.63 lbs.	60	12.71

415-4000

417-4070

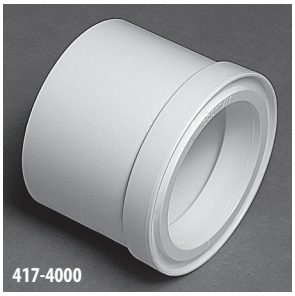
417-4000

417-2000

415-4030

417-4060

417-4080

417-6040

417-4010

415-6020

417-4020

417-5080

415-4110

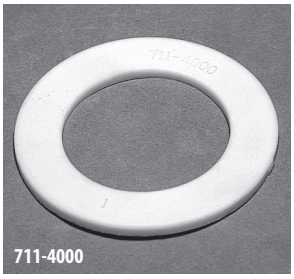
711-4000

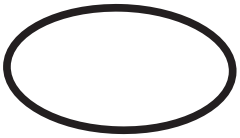
805-0226

1 ½" Union Components

Part No.	Description	Case Quantity	List (US $)
415-4000	1 ½" Union Nut	250	2.06
417-4070	1 ½" Flange x 1 ½" FPT Tailpiece	100	2.06
417-4000	1 ½" Flange x 1 ½" S Tailpiece	300	2.30
417-5500	1 ½" Flange x 50mm S Tailpiece	100	2.06
417-2000	1 ½" Flange x 1 ½" Spigot / 1" S Tailpiece	50	4.93
417-4100	1 ½" Flange x 1 ½" Spigot	75	3.96
417-4030	1 ½" Buttress Thread x 1 ½" Spigot Tailpiece	230	2.06
417-4060	1 ½" Buttress Thread x 1 ½" MPT Tailpiece	200	2.15
417-4080	1 ½" Flange x 1 ½" S Tailpiece - Short	150	1.86
417-6040	1 ½" Flange x 1 ½" / 1 ¼" Hose Adapter Fitting	75	1.80
417-4010	1 ½" Buttress Thread x 1 ½" S Tailpiece	250	2.31
417-6020	1 ½" Flange x 1 ½" S Hose Adapter Fitting	50	2.24
417-4020	1 ½" Buttress Thread x 1 ½" S - Short	50	2.31
417-5080	1 ½" Buttress Thread x 1 ½" S x 2" Spigot Tailpiece	75	2.69
417-4110	1 ½" Buttress x 1 ½" S - Short	150	3.61
711-4000	1 ½" Union Gasket	500	0.50
805-0226	O-Ring – 1 ½" Tailpiece	100	0.49

415-5000

417-5120

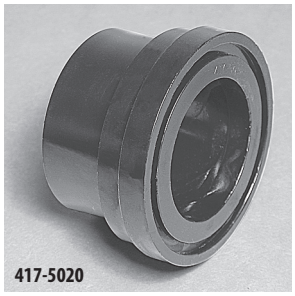
417-5020

417-5130

417-6030

417-5010

417-4220

417-5040

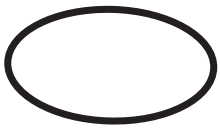
805-0145

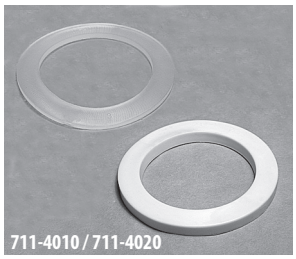
711-4010 / 711-4020

415-6000

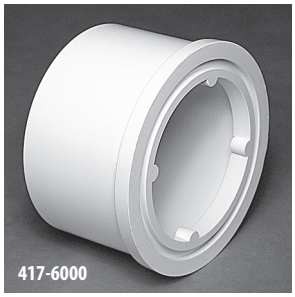
417-6000

417-6010

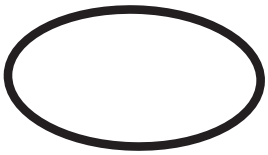
805-0232

2" and 2 ½" Union Components

Part No.	Description	Case Quantity	List (US $)
415-5000	2" Union Nut	180	3.14
417-5120	2" Flange x 2" S Tailpiece	50	3.27
417-5020	2" Flange x 2" Spigot / 1 ½" S Tailpiece	100	3.63
417-5130	2" Flange x 1 ½" FPT Nut Tailpiece	140	2.86
417-6050	2" Flange x 1 ½" / 1 ¼" Hose Adapter Fitting	200	3.02
417-6030	2" Flange x 1 ½" Hose Adapter Fitting	25	2.76
417-5010	2" Buttress Thread 2" Spigot / 1 ½" S Tailpiece	150	3.63
417-4220	2" Flange x 2" MPT	50	6.39
417-5090	2" Flange Thread x 1 ½" MPT Tailpiece	25	3.63
417-5040	2" Buttress Thread x 2" S Tailpiece	150	2.53
805-0145	O-Ring – 2" Heater Tailpiece	100	0.49
711-4010	2" Union Gasket	500	0.60
711-4020	¼" Thick Gasket	500	1.09
415-6000	2 ½" Union Nut	50	6.07
417-6000	2 ½" Flange x 2 ½" Socket	50	3.88
417-5970	2 ½" Flange x 2" Socket	50	3.63
417-6010	2 ½" Buttress Thread x 2 ½" Socket	100	4.18
805-0232	O-Ring – 2 ½" Heater Tailpiece	100	1.08

400-5491

1 ½" Heater Union Nuts

Part No.	Description	Case Quantity	List (US $)
400-5461	1 ½" Heater Split Nut - with Screws	75	4.39
400-5491	1 ½" Heater Split Nut - Long Assembly - with Screws	250	2.70
415-4021	1 ½" Heater Split Nut - without Screws	250	1.73

417-4090

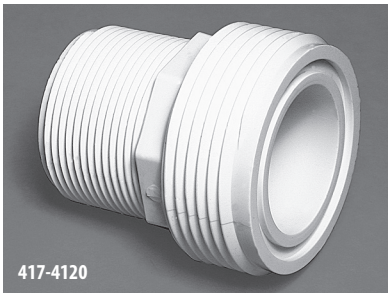
417-4120

417-4050

1 ½" Heater Union Tailpieces

Part No.	Description	Case Quantity	List (US $)
417-4090	1 ½" Buttress Thread x 1 ½" S Tailpiece	100	1.50
417-4120	1 ½" Buttress Thread x 1 ½" MPT Tailpiece	50	2.51
417-4050	1 ½" Buttress Thread x 1 ½" Spigot Tailpiece	75	1.50

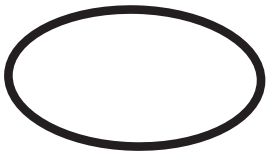
805-0224

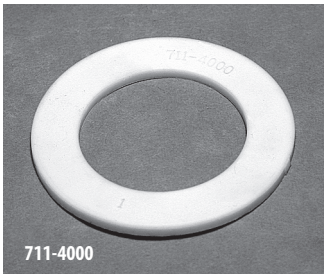
711-4000

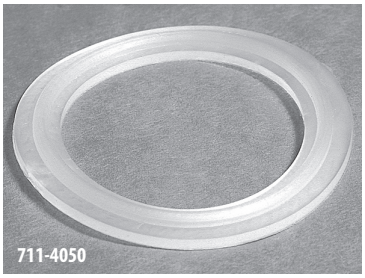
711-4050

1 ½" Heater Union O-Ring Gaskets

Part No.	Description	Case Quantity	List (US $)
805-0224	O-Ring - 1 ½" Heater Tailpiece	500	0.49
711-4000	Gasket - 1 ½" Heater Tailpiece	500	0.50
711-4050	O-Ring Gasket - 1 ½" Heater Tailpiece	500	0.57

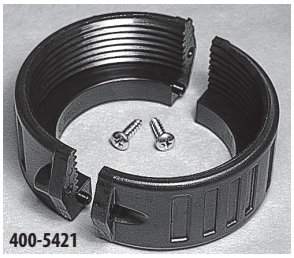
400-5421

2" Heater Union Nuts

Part No.	Description	Case Quantity	List (US $)
400-5421	2" Heater Split Nut - with Screws	100	2.51
415-5201	2" Heater Split Nut - without Screws	100	2.26

417-2090

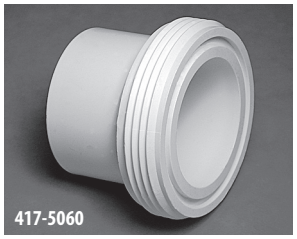
417-5060

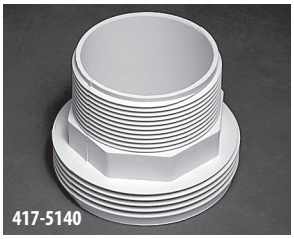
417-5140

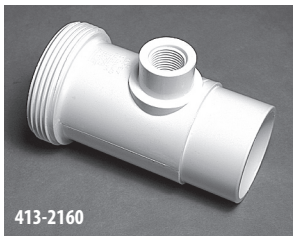
413-2160

417-5180

2" and 2 ½" Heater Union Tailpieces

Part No.	Description	Case Quantity	List (US $)
417-2090	2" Buttress Thread x 1 ½" S Tailpiece	50	2.08
417-5050	2" Buttress Thread x 2" S Tailpiece	150	2.08
417-5157	2" Buttress Thread x 63mm S Tailpiece	50	2.08
417-5060	2" Buttress Thread x 2" Spigot Tailpiece	45	2.08
417-5070	2" Buttress Thread x 2" Spigot / 1 ½" S Tailpiece	45	4.39
417-5140	2" Buttress Thread x 2" MPT Tailpiece	45	3.11
413-2160	Heater Flow Switch Tee - 2" Buttress Thread x 2" Spigot x ½" FPT	25	11.66
417-5180	2" Buttress Thread x ¾" S / 1" Spigot	100	2.37
417-5980	2 ½" Heater Buttress Tailpiece	100	4.31

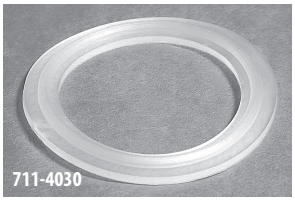
711-4030

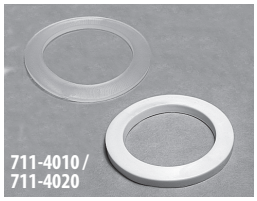
711-4010 / 711-4020

2" and 2 ½" Heater Union O-Rings and Gaskets

Part No.	Description	Case Quantity	List (US $)
711-4020	¼" Thick Gasket - 2" Heater Tailpiece	500	1.12
711-4010	Gasket - 2" Heater Tailpiece	500	0.62
805-0229	O-Ring - 2" Heater	500	0.61
711-4030	2" Heater Tailpiece Gasket - with O-Ring Rib	500	0.68
711-6020	2 ½" Heater Union Gasket	500	0.50

411-9100

411-9110

411-9120

411-9130

411-9140

411-9150

411-9210

411-9200

Sweep Ells

Part No.	Description	NSF Approved	Case Weight	Case Quantity	List (US $)
411-9100	1 ½" Spigot x 1 ½" S	x	7.15 lbs.	25	4.97
411-9110	1 ½" S x 1 ½" S	x	6.65 lbs.	25	4.97
411-9120	2" Spigot x 2" S	x	31.55 lbs.	70	5.68
411-9130	2" S x 2" S	x	27.89 lbs.	60	5.68
411-9140	2 ½" Spigot x 2 ½" S	x	26.4 lbs.	30	9.04
411-9150	2 ½" S x 2 ½" S	x	26.9 lbs.	30	9.04
411-9200	3" S x 3" S	x	25.59 lbs.	20	14.06
411-9210	3" S x 3" Spigot	x	25.59 lbs.	20	14.06

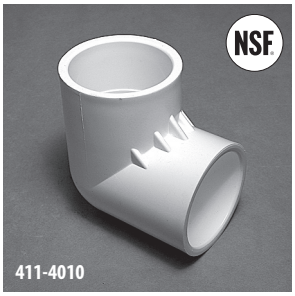

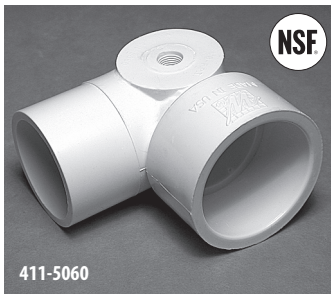

45° and 90° Ells

Part No.	Description	NSF Approved	Case Quantity	List (US $)
411-2020	45° Street Ell – 1" S x 1" Spigot	x	50	3.24
411-4040	45° Street Ell – 1 ½" S x 1 ½" Spigot		140	4.32
411-5030	45° Street Ell – 2" S x 2" Spigot		90	5.39
411-2010	45° Ell – 1" S x 1" S	x	150	3.17
411-2200	45° Ell – 2" Spigot x 2" Spigot	x	80	5.68
411-2000	90° Street Ell – 1" S x 1" Spigot	x	50	2.22
411-4000	90° Street Ell – 1 ½" S x 1 ½" Spigot		130	3.76
411-5080	90° Street Ell – 2" S x 2" Spigot		70	4.83
411-4010	90° Ell – 1 ½" S x 1 ½" S	x	50	2.43
411-5040	90° Street Ell – 2" S x 2" Spigot x ½" FPT Left Side Outlet	x	60	9.43
411-5050	90° Street Ell – 2" S x 2" Spigot x ⅜" FPT Left Side Outlet		25	9.43
411-5550	90° Ell – 1 ½" Spigot x 1 ½" Spigot	x	50	3.76
411-2100	90° Ell – 2" Spigot x 2" Spigot	x	60	5.39
411-4050	90° Ell – 1 ½" S x 1 ½" Spigot x 1" S Side Outlet	x	25	5.39
411-5060	90° Street Ell – 1 ½" S x 1 ½" Spigot x ⅛" FPT Side Outlet	x	50	6.75
411-4080	90° Street Ell – 1 ½" S x 1 ½" Spigot x ½" S Outlet	x	50	5.25
411-9170	Ell - 2" S x 2" S x ¾" SB		50	8.04
411-9180	Ell - 2 ½" S x 2 ½" S x ¾" SB		30	10.30

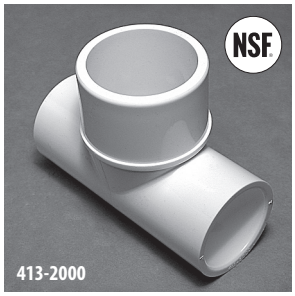

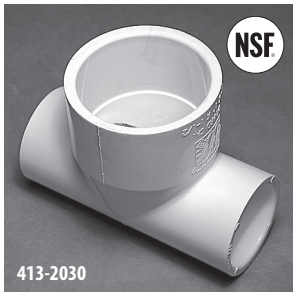

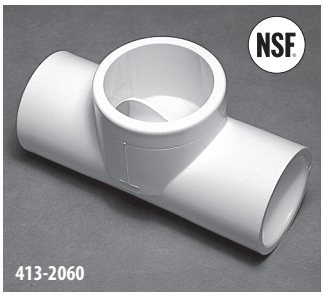

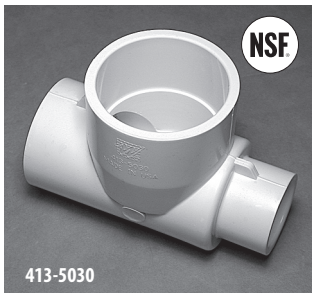

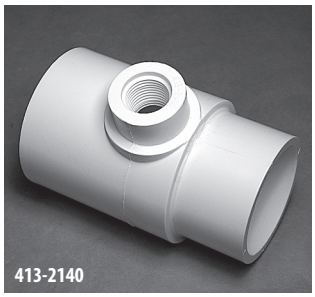

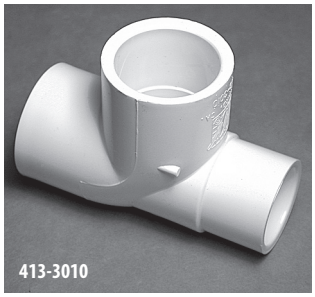

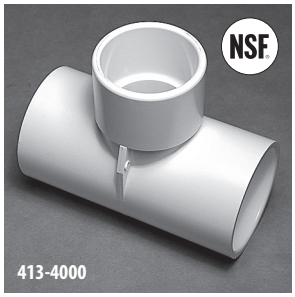

Tees

Part No.	Description	NSF Approved	Case Quantity	List (US $)
413-2000	1" S x 1" S x 1 ½" Spigot	x	50	4.04
413-2030	1" S x 1" S x 1 ½" S	x	140	4.04
413-2060	Low Profile - 1" S x 1" S x 1 ½" Spigot	x	50	4.59
413-2080	1" S x 1" S x 1" Spigot	x	100	2.18
413-5030	2" S x 1 ½" S x 1" S	x	70	6.81
413-2140	2" S x 2" Spigot x ½" FPT		25	7.28
413-2180	2" Spigot x 2" S x ⅜" Air Bleed		75	7.06
413-2130	2" S x 2" Spigot x ¾" FPT		75	7.28
413-2210	2" Spigot x 2" Spigot x 2" Spigot		40	6.78
413-1980	Reducer - ½" S x ½" S x 1" S		100	2.18
413-3010	Reducer - 1" S x 1" S x 1" Spigot / ¾" S		50	2.56
413-4000	1 ½" S x 1 ½" S x 1 ½" Spigot	x	90	5.57
413-2150	2" Spigot x 2" S x ½" S		75	5.42
413-2120	2" Spigot x 2" Spigot x 1" S	x	90	6.33
413-2090	1 ¼" S x 1 ¼" S x 1 ½" Spigot		100	5.39

Sanitary Tee

Part No.	Description	Case Quantity	List (US $)
413-2320	2 ½" x 2 ½" x 2 ½"	15	16.59

Cross Tee

Part No.	Description	NSF Approved	Case Quantity	List (US $)
413-1770	Cross Tee - 1 ½" S x ¾" S x ¾" S x ¾" S	x	50	78.18

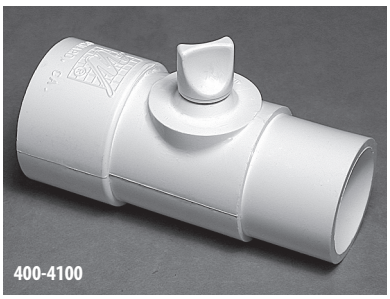

Tee Assemblies

Part No.	Description	Case Quantity	List (US $)
400-4100	Tee Assembly with Relief Plug 1 ½" S x 1 ½" Spigot x ⅜" FPT	100	8.49
400-4260	Tee Assembly with Relief Plug 2" Spigot x 2" S x ⅜" FPT with O-Ring	70	8.81

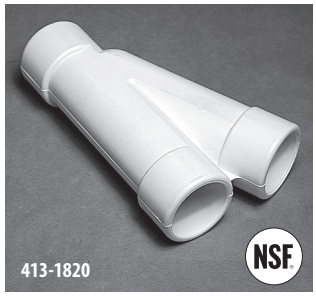

Wyes

Part No.	Description	NSF Approved	Case Quantity	List (US $)
413-1810	120° Wye - ¾" S x ¾" S x ¾" S	x	50	5.39
413-4160	120° Wye - 1" S x 1" S x 1" S		100	5.39
413-4100	120° Wye - 1 ½" S x 1 ½" S x 1 ½" S		70	8.12
413-5080	120° Wye - 2" S x 2" S x 2" S		50	11.32
413-5040	120° Wye - 2" S x 1 ½" S x 1 ½" S	x	50	11.32
413-4130	120° Wye - 1 ½" S x 1" S x 1" S	x	140	7.28
413-1820	22 ½° Wye - ¾" S x ¾" S x ¾" S	x	50	5.05
413-2020	22 ½° Wye - 1" S x 1" S x 1" S		120	5.39
413-4140	22 ½° Wye - 1 ½" S x 1" S x 1" S		90	6.15

FEATURES:

- Improves performance
- Saves plumbing cost
- Makes plumbing easier
- Available in two different sizes
- Made of fitting grade type 1 PVC
- Made in the USA

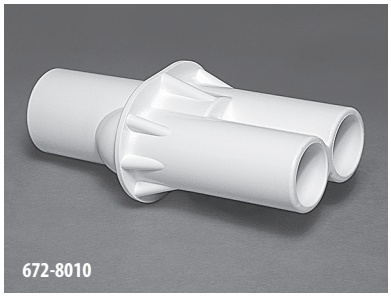

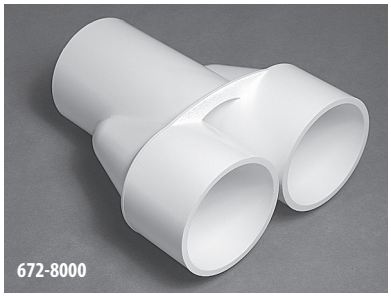

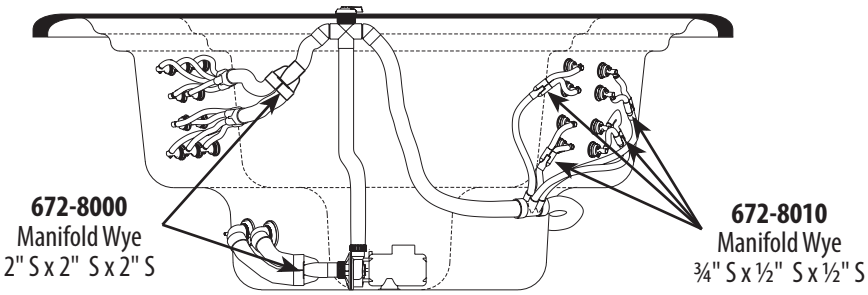

Manifold Wyes

Part No.	Description	Case Quantity	List (US $)
672-8010	¾" S x ½" S x ½" S	220	3.61
672-8020	1" S x ¾" S x ¾" S	180	3.61
672-8040	1 ½" S x 1 ½" S x 1 ½" S	50	8.22
672-8000	2" S x 2" S x 2" S	30	11.29
672-8050	2 ½" S x 2 ½" S x 2 ½" S	20	9.75

SP™ SmartPlumb

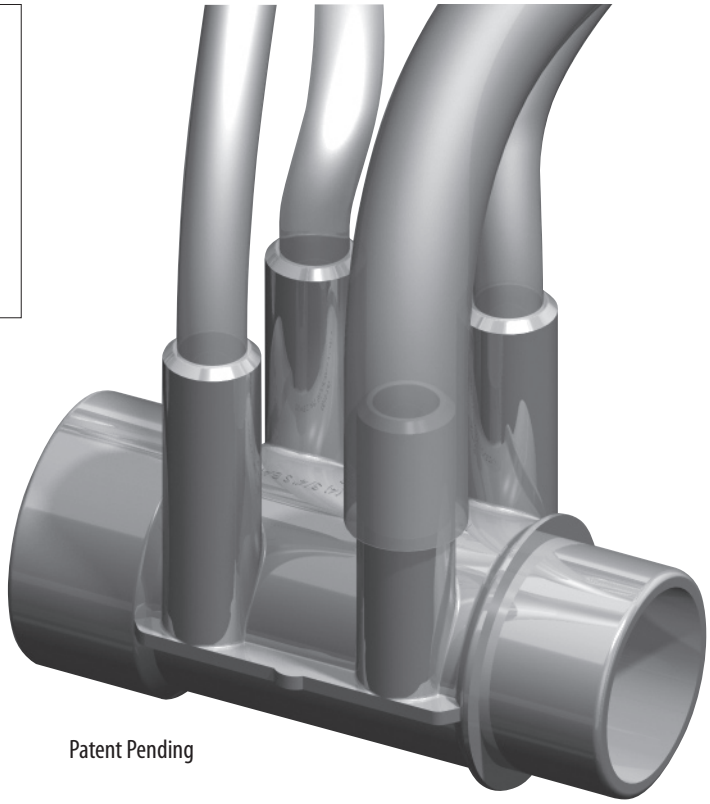

FEATURES:

- Use ⅜" and ¾" tubing interchangeably
- Available in multiple Manifolds, Specialty Fittings and Water Features
- Use with Cluster, Mini and Poly Storm Jets
- Save more than 50% on hosing costs
- Increase production capacity

Patent Pending

Waterway's versatile SmartPlumb™ system allows the user to interchangeably use either ⅜" or ¾" tubing within the same manifold system. With this new exciting technology, it is now possible to save more than 50% on your jet plumbing! The ease of plumbing will increase your plumbing capacity significantly.

SmartPlumb Fittings

Part No.	Description	Case Quantity	List (US $)
211-0520	Cluster Jet Body - ¾" SB x ⅜" SB	50	4.31
211-0550	Cluster Jet Body - ¾" B x ⅜" B	50	4.31
211-0690	Cluster Jet Ell Body - ¾" B x ⅜" B	1	4.31
223-2110	Mega Storm Jet Body - ¾" RB x ⅜" S	1	11.96
212-0400	Poly Storm Jet Body - ¾" RB x ⅜" RB	1	7.68
212-0430	Poly Storm Jet Body - ¾" SB x ⅜" RB	1	7.68
212-1550G	Cluster Storm Body - ¾" RB x ⅜" RB	1	6.44
212-1560G	Cluster Storm Jet Body - ¾" SB x ⅜" RB	1	6.44
212-0040	Power Storm Jet Body - ⅜" RB x ¾" RB (2 piece)	1	8.38
212-0300	Mini-Storm Jet Body - ¾" RB x ⅜" RB	1	6.78
212-0330	Mini-Storm Jet Body - ¾" SB x ⅜" SB	1	6.78
223-7940	Mini-Storm Jet Body - ¾" RB x No Air	100	6.78
413-4510	Adapter - 2" Spigot x ¾" SB	125	4.19
413-4520	Adapter - 2" Spigot x ¾" RB	125	4.19
419-0900	Coupling - ¾" SB x ¾" SB	250	4.19
419-1920	Adapter - ¾" SB x ½" Spigot	400	4.19
600-4710	100% Shut-Off Valve Body - ¾" SB x ¾" SB	400	23.98
672-4140	Shur-Grip Manifold - 1 ½" S x 1 ½" S x (4) ¾" SB	60	4.32
672-4150	Shur-Grip Manifold - 1 ½" S x 1 ½" Spigot x (4) ¾" SB	60	4.32
672-4160	Shur-Grip Manifold - 2" S x 2" Spigot x (4) ¾" SB	45	4.56
672-4170	Shur-Grip Manifold - 2" S x 2" S x (4) ¾" SB	40	4.56
672-4410	Shur-Grip Manifold - 1" S x (4) ¾" SB	50	7.11
672-4490	Shur-Grip Manifold - 1 ½" S x 1 ½" S x (2) ¾" SB	80	6.57
672-4680	Shur-Grip Manifold - 1 ½" Spigot x 1 ½" S x (10) ¾" SB Ports	35	11.98
672-4900	Shur-Grip Manifold - 2" Spigot x 2" Spigot x (2) ¾" SB	60	4.37
672-4910	Shur-Grip Manifold - 2" S x 2" Spigot x (2) ¾" SB	60	4.37
672-4920	Shur-Grip Manifold - 2" Spigot x 2" Spigot x (4) ¾" SB	45	4.56
672-4930	Shur-Grip Manifold - 2" Spigot x 2" Spigot x (6) ¾" SB	30	6.36
672-4940	Shur-Grip Manifold - 2" S x 2" Spigot x (6) ¾" SB	30	6.36
672-4960	Shur-Grip Manifold - 1 ½" S x Dead End x (4) ¾" SB Ports	75	4.32
672-7100	Manifold - 2" S x 2" S x (2) ¾" RB	50	5.80
672-7110	Manifold - 2" S x 2" S x (4) ¾" RB	40	6.96
672-7120	Manifold - 2" S x 2" S x (6) ¾" RB	30	9.31
672-7130	Manifold - 2" S x 2" Spigot x (2) ¾" RB	50	5.80
672-7140	Manifold - 2" S x 2" Spigot x (4) ¾" RB	40	6.96
672-7150	Manifold - 2"S x 2" Spigot x (6) ¾" RB	30	9.31
672-7160	Manifold - 2" S x Dead End x (2) ¾" RB	100	5.80
672-7170	Manifold - 2" S x Dead End x (4) ¾" RB	50	6.96
672-7180	Manifold - 2" S x Dead End x (6) ¾" RB	40	9.31
672-7920	Shur-Grip Manifold - 2" S x 2" S x (2) ¾" SB	50	4.37
672-7930	Shur-Grip Manifold - 2" S x 2" S x (6) ¾" SB	30	6.32
715-0040	¾" SmartPlumb Barb	1300	0.77

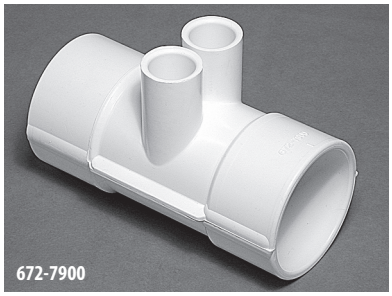
672-7900

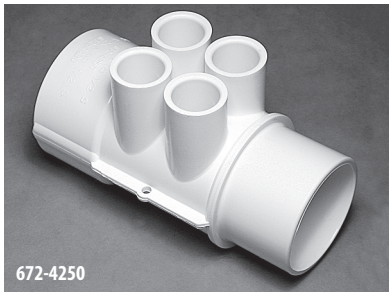
672-4250

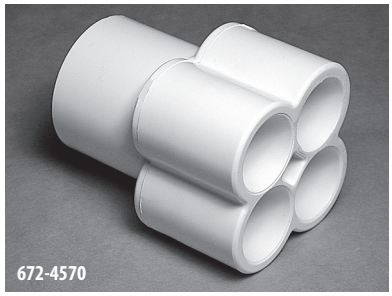
672-4570

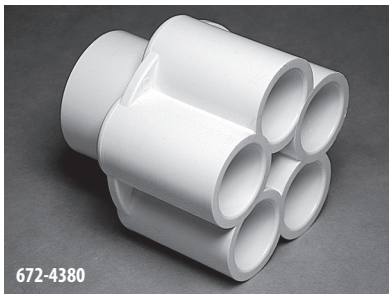
672-4380

672-4120

672-4110

672-4630

½" Manifolds

Part No.	Description	Case Quantity	List (US $)
672-7900	2" S x 2" S x (2) ½" S Ports	45	4.21
672-4250	2" Spigot x 2" S x (4) ½" S Ports	50	4.56
672-4570	1" S x (4) ½" S Ports	90	4.06
672-4580	1 ½" S x (4) ½" S Ports	75	4.06
672-4430	2" S x 2" S x (4) ½" S Ports	40	4.56
672-4380	1" S x (5) ½" S Ports	70	6.49
672-4120	1 ½" S x (6) ½" S Ports	50	10.48
672-4130	2" S x (6) ½" S Ports	90	10.48
672-4110	2" S x 2" S x (6) ½" S Ports	40	6.77
672-4630	1 ½" Spigot x 1 ½" S x (10) ½" S Ports with Plugs (4)	30	11.03

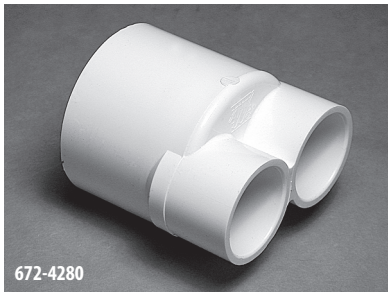
672-4280

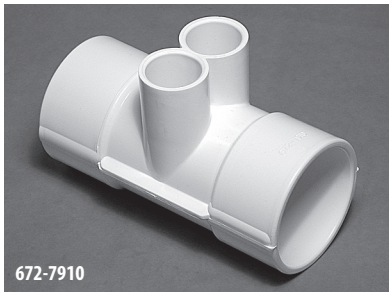
672-7910

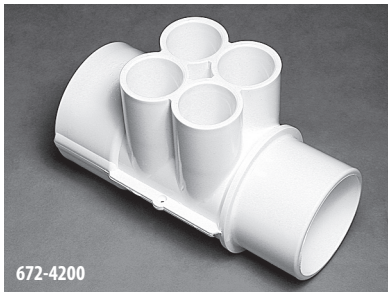
672-4200

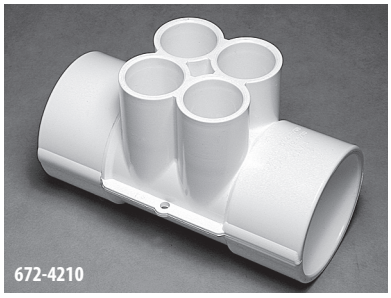
672-4210

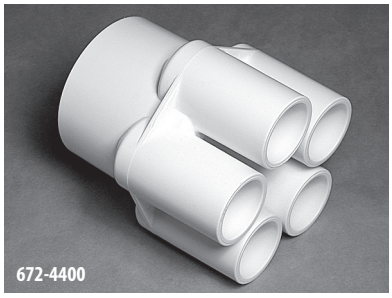
672-4400

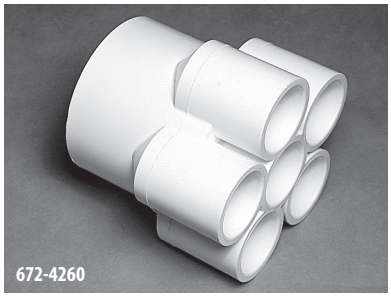
672-4260

672-4270

672-4640

¾" Manifolds

Part No.	Description	Case Quantity	List (US $)
672-4280	1 ½" S x (2) ¾" S Ports	80	3.59
672-7910	2" S x 2" S x (2) ¾" S Ports	45	4.21
672-4190	1 ½" Spigot x 1 ½" S x (4) ¾" S Ports	70	4.32
672-4200	2" S x 2" Spigot x (4) ¾" S Ports	45	4.56
672-4670	1 ½" S x (4) ¾" S Ports	45	4.56
672-4180	1 ½" S x 1 ½" S x (4) ¾" S Ports	60	4.32
672-4210	2" S x 2" S x (4) ¾" S Ports	40	4.56
672-4400	2" S x (5) ¾" S Ports	50	10.11
672-4260	2" S x (6) ¾" S Ports	70	10.48
672-4270	2" S x 2" S x (6) ¾" S Ports	35	6.77
672-4640	1 ½" Spigot x 1 ½" S x (8) ¾" S Ports with Plugs (4)	20	11.03

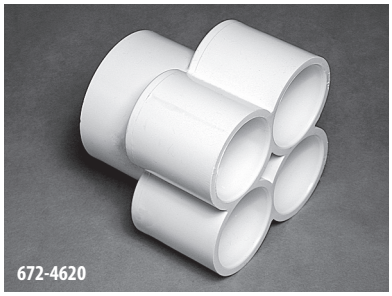
672-4620

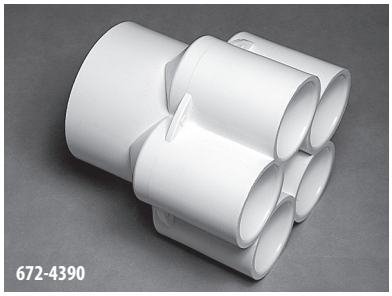
672-4390

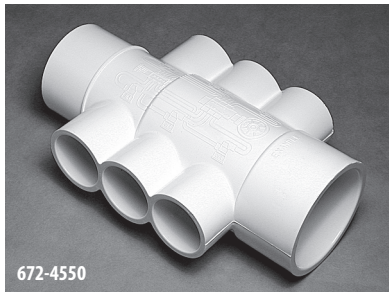
672-4550

1" Manifolds

Part No.	Description	Case Quantity	List (US $)
672-4620	1 ½" S x (4) 1" S Ports	25	8.12
672-4390	2" S x (5) 1" S Ports	45	10.11
672-4550	2" Spigot x 2" S x (6) 1" S Ports	30	12.57

FEATURES:

- Can be cut into multiple manifolds (2, 4, or 6 ports)
- Utilizes ¾" and ⅜" clear vinyl tubing (less expensive than flex pipe)
- Allows for cleaner, easier plumbing
- Manifold comes complete with 1 plug

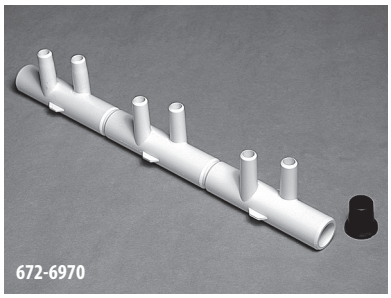
672-6970

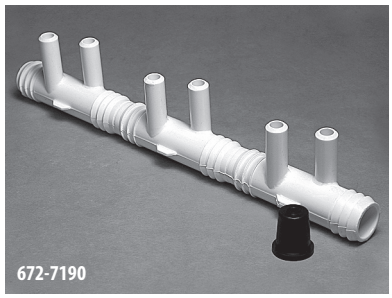
672-7190

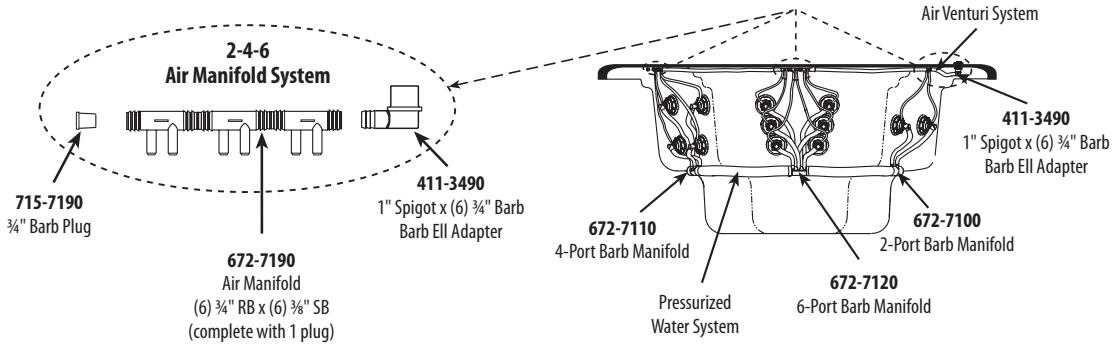

2-4-6 Air Manifold Systems

Part No.	Description	Case Quantity	List (US $)
672-6970	2-4-6 Manifold - (6) ¾" SB x (6) ⅜" SB Ports	50	6.77
672-7190	2-4-6 Manifold – (6) ¾" RB x (6) ⅜" SB Ports	50	6.77

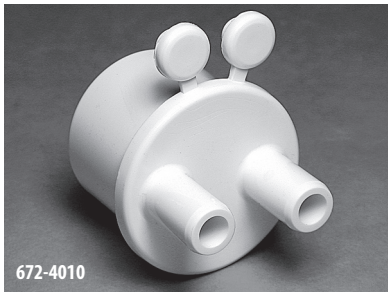
672-4010

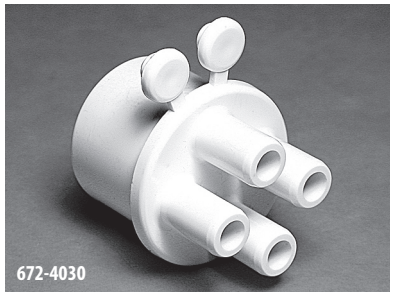
672-4030

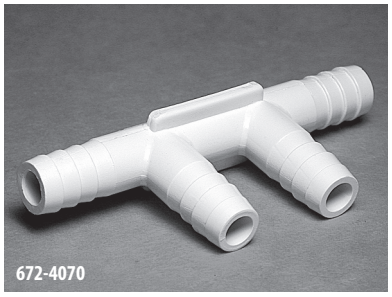
672-4070

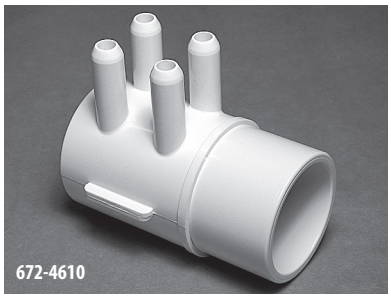
672-4610

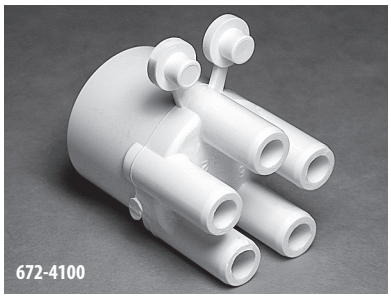
672-4100

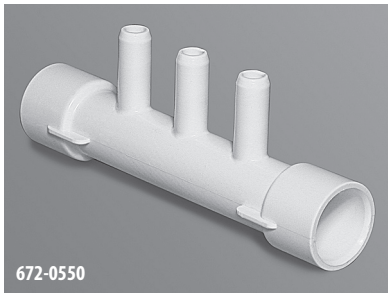
672-0550

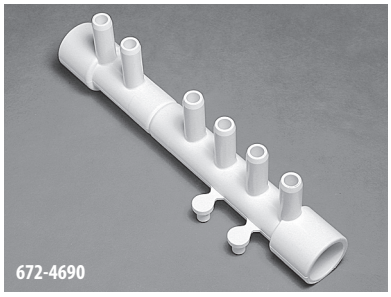
672-4690

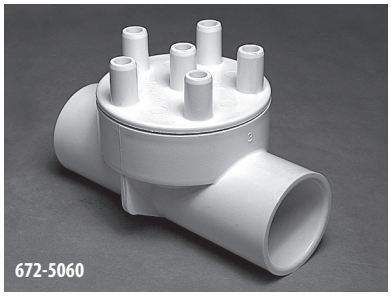
672-5060

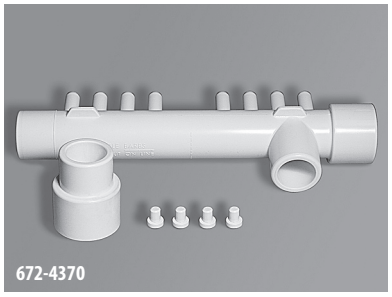
672-4370

⅜" Barb Manifolds

Part No.	Description	Case Quantity	List (US $)
672-4010	1" Spigot x (2) ⅜" Barbs with Plugs (2)	250	2.30
672-4020	1" S x (2) ⅜" Barbs with Plugs (2)	200	2.30
672-4030	1" Spigot x (4) ⅜" Barbs with Plugs (2)	250	2.51
672-4040	1" S x (4) ⅜" Barbs with Plugs (2)	250	2.51
672-4070	(4) ⅜" RB	500	2.32
672-4610	1 ½" S x Blind Hole x (4) ⅜" SB	150	3.84
672-4100	1" Spigot x (5) ⅜" Barbs with Plugs (2)	160	2.51
672-0550	(2) ½" S x (3) ⅜" SB	150	3.56
672-4700	1" Spigot x 1" Spigot x (6) ⅜" Barbs with Plugs (3)	50	6.15
672-4690	½" S x ½" S x (6) ⅜" Barbs with Plugs (2)	50	6.15
672-5060	1" S x 1" S x (6) ⅜" Barbs Assembly	100	4.79
672-4370	1" S x 1" Spigot x 1" S x (8) ⅜" Barbs with Plugs (4)	50	4.21

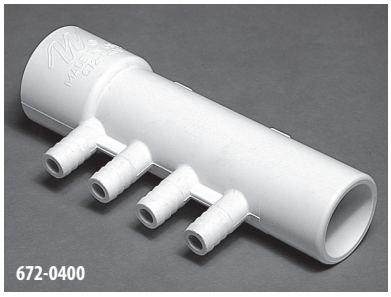
672-0400

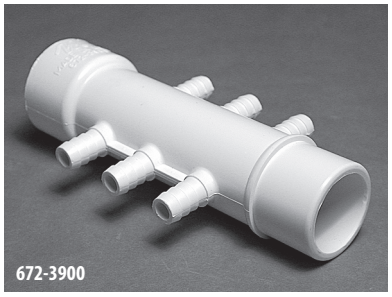
672-3900

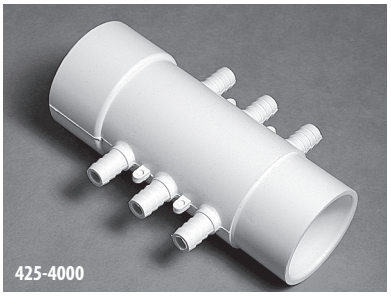
425-4000

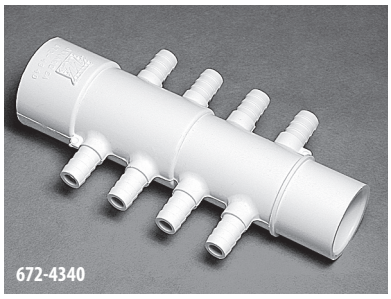
672-4340

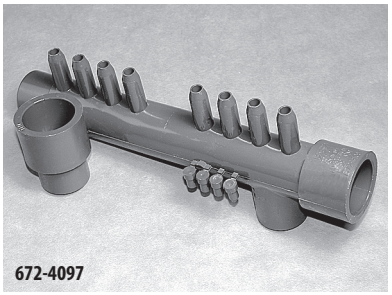
672-4097

672-4660

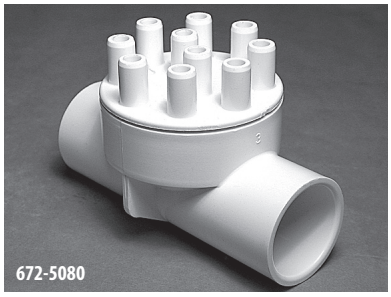
672-5080

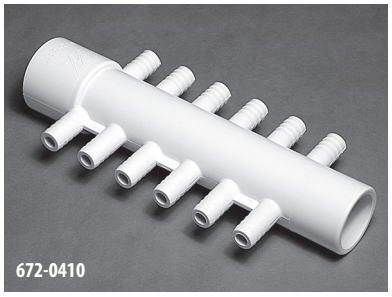
672-0410

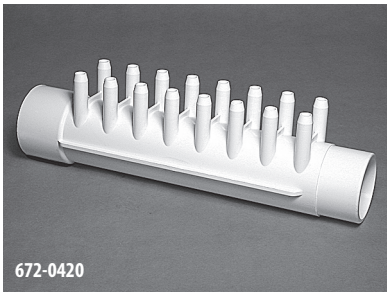
672-0420

⅜" Barb Manifolds

Part No.	Description	Case Quantity	List (US $)
672-0400	1" S x 1" Spigot x (4) ⅜" RB Barbs	50	4.06
672-3900	1" S x 1" Spigot x (6) ⅜" RB Barbs	50	4.06
425-4000	1 ½" Spigot x 1 ½" S x (6) ⅜" RB Barbs	75	9.43
672-4340	1" S x 1" Spigot x (8) ⅜" RB Barbs	50	4.06
672-4097	32mm Spigot x 32mm S x 32mm Spigot x (8) ⅜" Ports	125	8.79
672-5070	1" S x 1" S x (8) ⅜" Barbs Assembly	100	4.79
672-4660	1 ½" Spigot x 1 ½" S x (10) ⅜" Barbs with Plugs (4)	50	12.59
672-5080	1" S x 1" S x (10) ⅜" Barbs Assembly	100	4.79
672-0410	1" S x 1" Spigot x (12) ⅜" RB Barbs	100	5.33
672-0420	1 ½" S x 1 ½" Spigot x (16) ⅜" SB Barbs	35	8.94

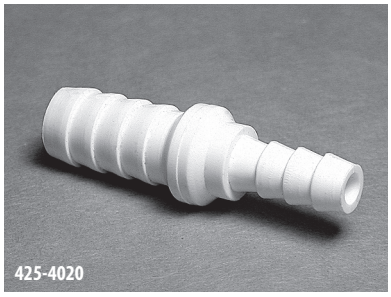
425-4020

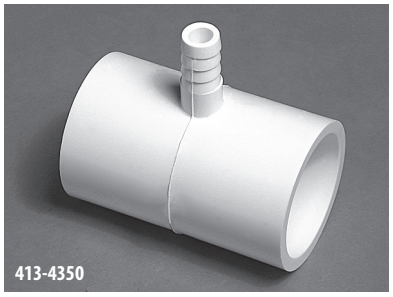
413-4350

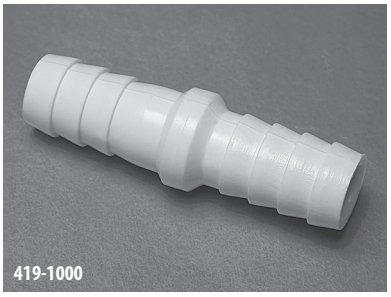
419-1000

425-4040

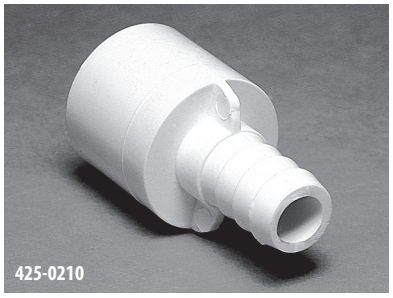
425-0210

425-5010

672-4350

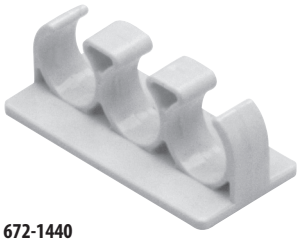
672-1440

672-1450

672-1430

⅜" Barb Adapters

Part No.	Description	Case Quantity	List (US $)
425-4020	Reducer - ⅜" RB x ¼" RB	3000	0.93
413-4350	Tee - 1" S x 1" S x ⅜" RB	100	2.27
419-1000	Coupler - ⅜" RB x ⅜" RB	2500	1.61
425-4040	90° Ell - 1" S x ⅜" RB	150	2.27
425-0210	½" Spigot x ⅜" RB	500	1.50
425-5010	1" Spigot x ⅜" RB	300	2.18
672-4350	⅜" B x ¼" MPT	500	2.84
413-1201	⅜" B x ¼" N.P.S.M.	500	2.69
413-1900	Tee - ⅜" B x ⅜" B x ⅜" B	500	1.43
425-1080	¾" Spigot x ⅜" SB	20	1.72
672-1440	9⁄16" Triple "C" Tubing Holder	20	3.50
672-1450	9⁄16" x ¾" Stacked Tubing Clip	20	0.51
672-1430	1 ½" Manifold "C" Holder	20	0.91

Spa Manifolds / **Shur-Grip Manifolds**

The Shur-Grip Plumbing System was specifically developed for the OEM Spa Manufacturing Industry. Shur-Grip components improve the glue joint characteristics yet maintain the quality of the flex hose at an affordable price.
Look for the Shur-Grip symbol on compatible jet bodies and other speciality fittings.

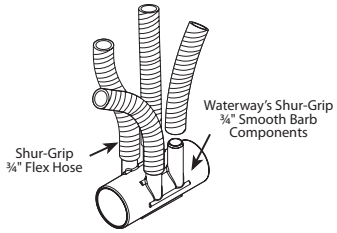

SHUR-GRIP™ COMPONENTS

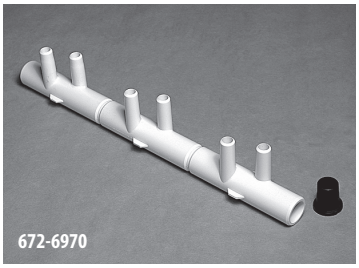
672-6970

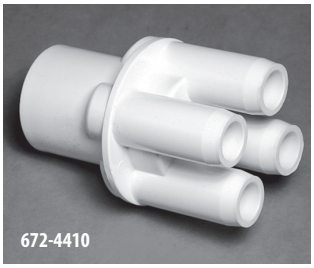
672-4410

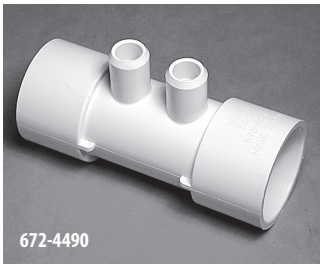
672-4490

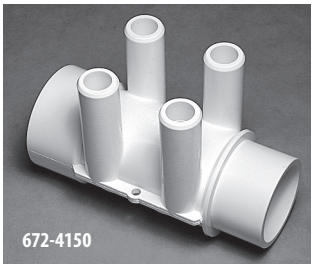
672-4150

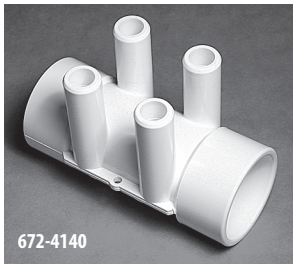
672-4140

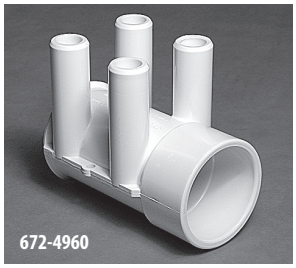
672-4960

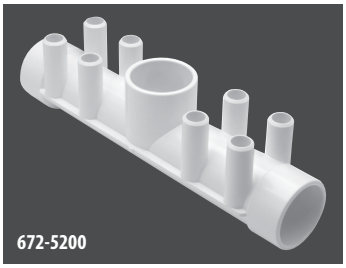
672-5200

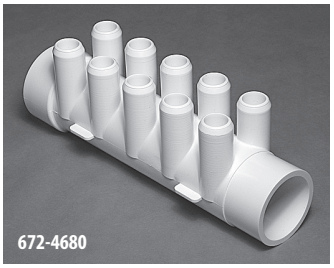
672-4680

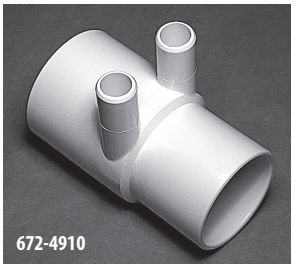
672-4910

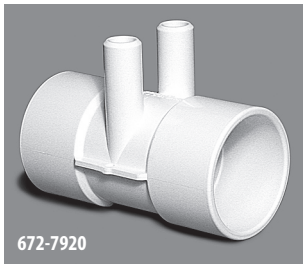
672-7920

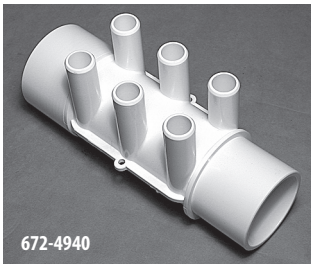
672-4940

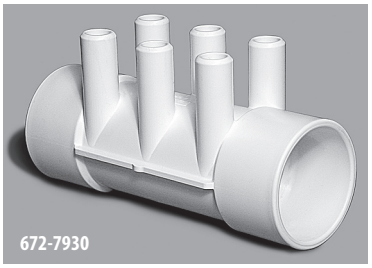
672-7930

Shur-Grip Manifolds

Part No.	Description		Case Quantity	List (US $)
672-6970	(6) ¾" SB x (6) ⅜" SB with Plug		50	6.77
672-4410	1" S x (4) ¾" SB - Cluster Cap	SP	50	7.11
672-4770	1 ½" S x (4) ¾" SB - Cluster Cap	SP	100	7.11
672-4490	1 ½" S x 1 ½" S x (2) ¾" SB	SP	80	6.57
672-4150	1 ½" S x 1 ½" Spigot x (4) ¾" SB	SP	60	4.32
672-4140	1 ½" S x 1 ½" S x (4) ¾" SB	SP	60	4.32
672-4960	1 ½" S x Dead End x (4) ¾" SB	SP	75	4.32
672-5200	1 ½" S x 1 ½" S x 1 ½" S x (8) ¾" SB	SP	20	10.71
672-4680	1 ½" Spigot x 1 ½" S x (10) ¾" SB	SP	35	11.98
672-4900	2" Spigot x 2" Spigot x (2) ¾" SB	SP	60	4.37
672-4910	2" S x 2" Spigot x (2) ¾" SB	SP	60	4.37
672-7920	2" S x 2" S x (2) ¾" SB	SP	60	4.37
672-7360	2" S x Dead End x (2) ¾" SB	SP	20	4.37
672-4920	2" Spigot x 2" Spigot x (4) ¾" SB	SP	45	4.56
672-4160	2" S x 2" Spigot x (4) ¾" SB	SP	45	4.56
672-4170	2" S x 2" S x (4) ¾" SB	SP	45	4.56
672-7370	2" S x Dead End x (4) ¾" SB	SP	20	4.56
672-4930	2" Spigot x 2" Spigot x (6) ¾" SB	SP	30	6.36
672-4940	2" S x 2" Spigot x (6) ¾" SB	SP	30	6.36
672-7930	2" S x 2" S x (6) ¾" SB	SP	30	6.32
672-7380	2" S x Dead End x (6) ¾" SB	SP	20	6.36

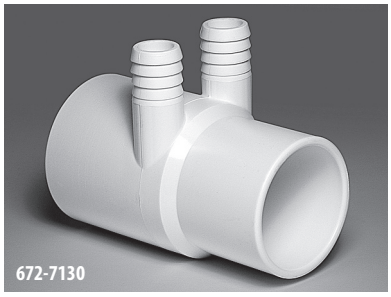
672-7130

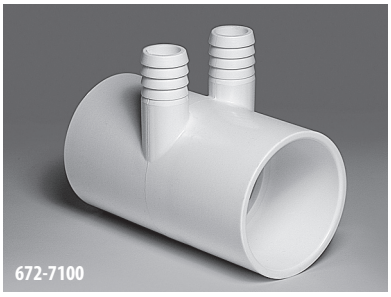
672-7100

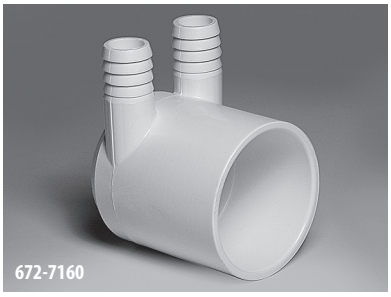
672-7160

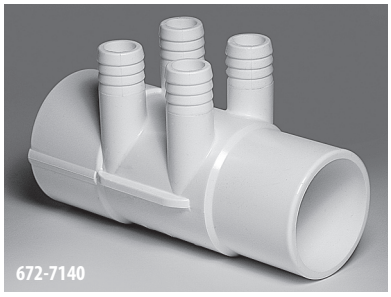
672-7140

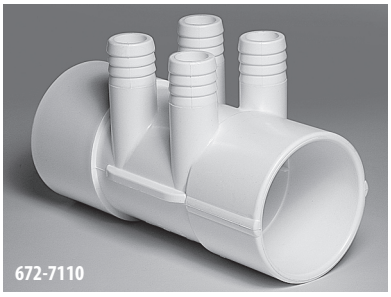
672-7110

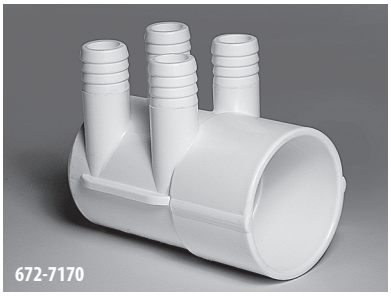
672-7170

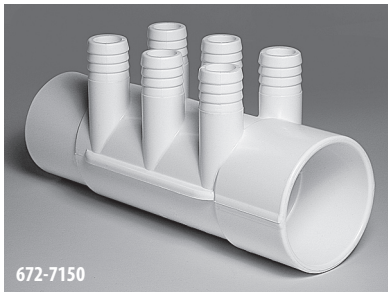
672-7150

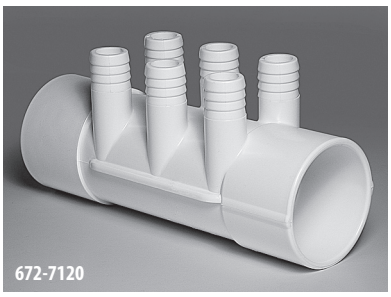
672-7120

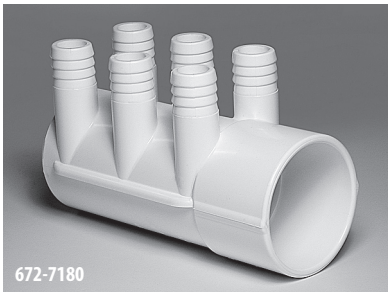
672-7180

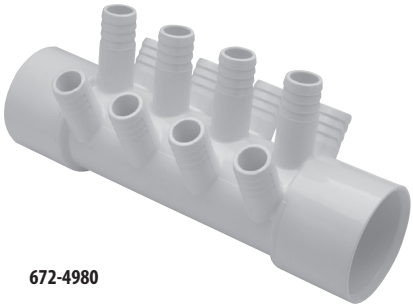
672-4980

¾" Ribbed Barb Manifolds

Part No.	Description		Case Quantity	List (US $)
672-7130	2" S x 2" Spigot x (2) ¾" RB	SP	50	5.80
672-7100	2" S x 2" S x (2) ¾" RB	SP	50	5.80
672-7160	2" S x Dead End x (2) ¾" RB	SP	100	5.80
672-7140	2" S x 2" Spigot x (4) ¾" RB	SP	40	6.96
672-7110	2" S x 2" S x (4) ¾" RB	SP	40	6.96
672-7170	2" S x Dead End x (4) ¾" RB	SP	50	6.96
672-7150	2" S x 2" Spigot x (6) ¾" RB	SP	30	9.31
672-7120	2" S x 2" S x (6) ¾" RB	SP	30	9.31
672-7180	2" S x Dead End x (6) ¾" RB	SP	40	9.31
672-4980	2" S x 2" S x (12) ¾" RB		20	12.00

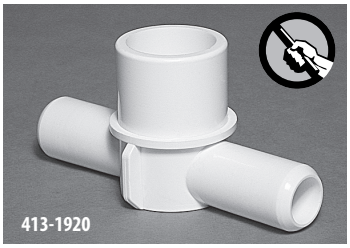
413-1920

411-3490

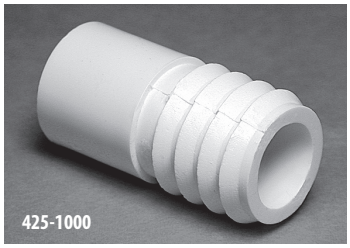
425-1000

413-4360

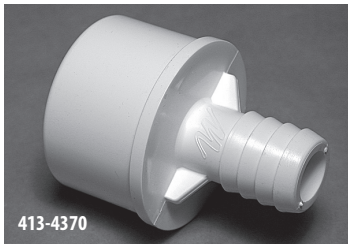
413-4370

672-4310

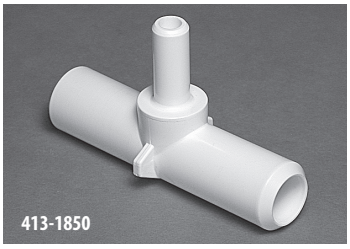
413-1850

411-3700

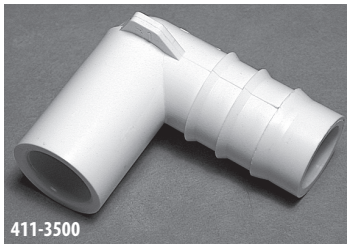
411-3500

411-4060

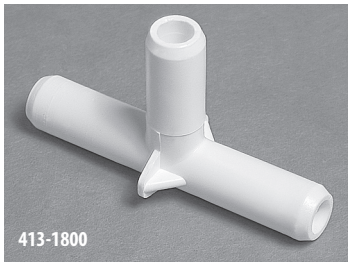
413-1800

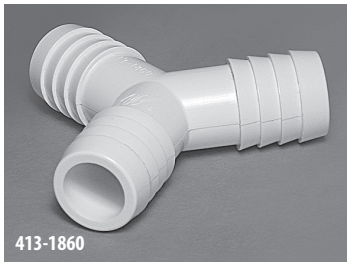
413-1860

¾" Barb Adapters

Part No.	Description	Case Quantity	List (US $)
411-3700	90° Ell - ¾" RB x ¾" RB	150	1.94
413-1860	120° Wye - ¾" RB	150	5.25
413-1800	Tee - ¾" SB x ¾" SB x ¾" SB	150	2.76
413-1850	Tee - ¾" SB x ¾" SB x ⅜" SB	250	2.76
425-1000	½" Spigot x ¾" RB	300	1.25
425-1030	½" S x ¾" Spigot x ¾" RB	350	3.59
411-3500	90° Ell - ½" Spigot x ¾" RB	150	1.25
411-0360	90° Ell - ¾" Spigot x ½" S x ¾" SB	500	1.75
411-0350	90° Ell - ¾" Spigot x ½" S x ¾" RB	500	1.75
411-4060	90° Ell - ¾" Spigot x ¾" RB	300	1.72
411-3490	Ell - 1" Spigot x ¾" RB	230	2.22
411-3480	Ell - 1" Spigot x ¾" SB	180	2.22
413-1920	Tee - 1" Spigot x (2) ¾" SB	180	2.96
672-4310	1" Spigot / ¾" S x ¾" RB	250	2.27
672-4320	1 ¼" Spigot / 1" S x ¾" RB	200	2.27
413-4360	1 ½" Spigot x ¾" SB	200	3.51
413-4370	1 ½" Spigot x ¾" RB	100	3.51
413-4510	2" Spigot x ¾" SB SP	125	4.19

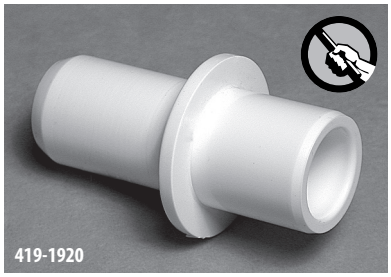
419-1920

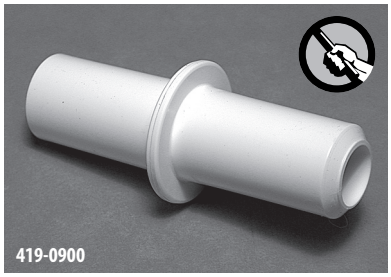
419-0900

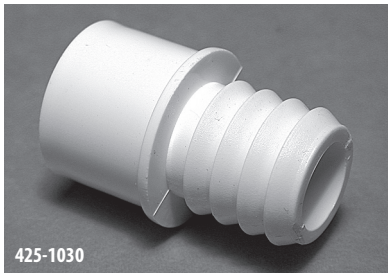
425-1030

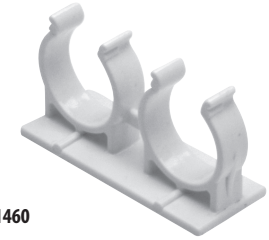
672-1460

715-2150

¾" Barb Adapters

Part No.	Description	Case Quantity	List (US $)
419-1920	¾" SB x ½" Spigot SP	400	4.19
419-0900	Coupling - ¾" SB x ¾" SB SP	250	4.19
425-1030	½" S / ¾" Spigot x ¾" RB	200	3.59
672-1460	¾" "C" Clip with Zip Tie Loops	1000	0.75
715-2150	¾" SmartPlumb Deep Inverted Plug SP	300	1.03

425-1010

1" Barb Adapters

Part No.	Description	Case Quantity	List (US $)
425-1010	1" Spigot / ¾" S x 1" RB	125	2.27

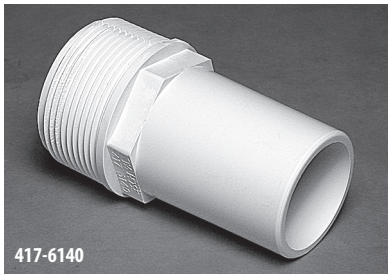
417-6140

1 ½" Barb Adapters

Part No.	Description	Case Quantity	List (US $)
417-6140	1 ½" MPT x 1 ½" Hose	260	2.51

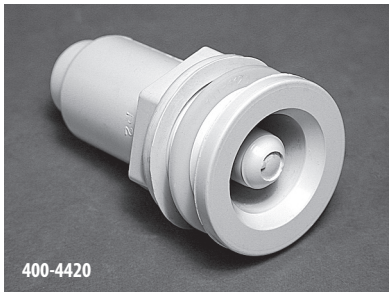
400-4420

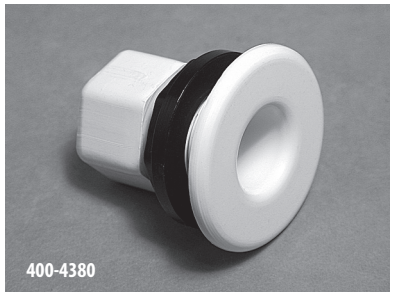
400-4380

400-5540

400-5580

400-6040

Thermowells

Part No.	Description	Case Quantity	List (US $)
400-4420	Mini Thermowell Assembly	100	11.32
400-4380	Thermosensor with Probe Protector	150	10.80
400-5540	90° Ell - 1 ½" S x 1 ½" S - with 2 Thermowells and Bushings	80	11.07
411-5520	Ell – 1 ½" S x 1 ½" S - with 2 Thermowells	25	8.03
400-5580	Ell – 1 ½" S x 1 ½" S - with Thermowell and Bushing	100	11.07
411-5540	90° Ell – 1 ½" S x 1 ½" S - with Thermowell	25	8.03
400-6040	90° Ell – 2" S x 2" Spigot x ⅜" Air Bleed - with Thermowell and 2 Bushing	60	12.34
411-6040	90° Ell – 2" S x 2" Spigot x Air Bleed - with Thermowell	60	11.24
805-0014	O-Ring for 90° Ell – 2" S x 2" Spigot x Air Bleed	100	0.48
811-8160	Bushing for Ells – 1 ½" S x 1 ½" S	100	0.75

421-1000

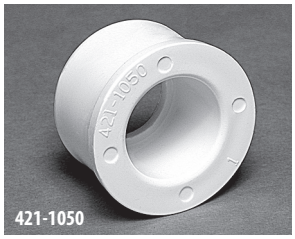
421-1050

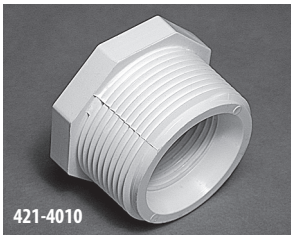
421-4010

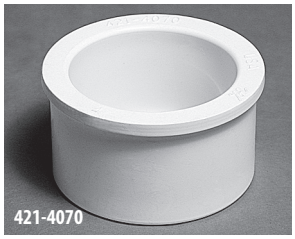
421-4070

421-4020

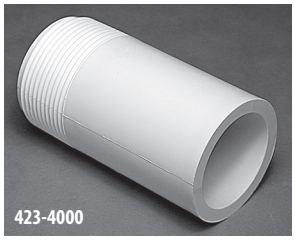
423-4000

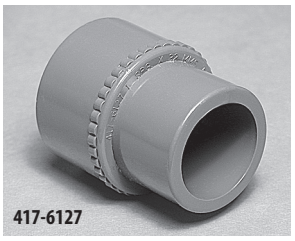
417-6127

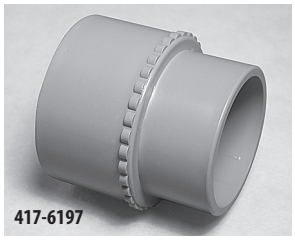
417-6197

Reducers

Part No.	Description	Case Quantity	List (US $)
421-1000	Reducer - 2" Spigot x 1 ½" Spigot	50	3.76
421-1050	Reducer - 1" Spigot x ½" S	225	1.43
421-4010	Reducer - 1 ¼" MPT x ½" FPT	150	6.74
421-4030	Reducer - 1 ½" Spigot x 1" Spigot	100	3.24
421-4070	Reducer - 1 ½" Socket x 2" Spigot	100	2.07
421-4020	Bell Reducer - 1 ½" x 1" S	75	3.24
421-5000	Bell Reducer - 2" S x 1 ½" S	150	4.04
417-6127	Metric Reducer - 1" Spigot x 32mm S	75	1.51
417-6137	Metric Reducer - 1 ½" Spigot x 50mm S	50	3.24

Threaded Nipple

Part No.	Description	Case Quantity	List (US $)
423-4000	1 ½" Spigot x 1 ½" MPT	25	5.39

2" Barb Adapter

Part No.	Description	Case Quantity	List (US $)
417-6197	2" Spigot x 63mm S	50	5.60

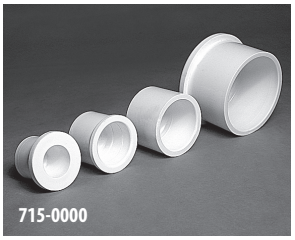
715-0000

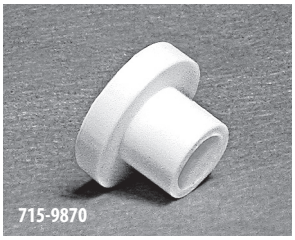
715-9870

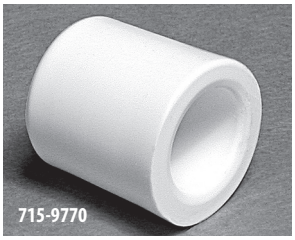
715-9770

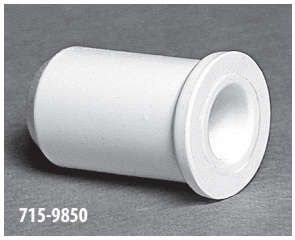
715-9850

Plugs

Part No.	Description	Case Quantity	List (US $)
715-0000	½" Spigot	800	0.97
715-9890	¾" Spigot	600	1.00
715-2000	1" Spigot	200	1.06
715-4000	1 ½" Spigot	100	1.61
715-9880	2" Spigot	100	2.12
715-9870	⅜" Barb	100	0.81
715-0040	¾" SmartPlumb Barb *(New Style)*	1300	0.77
715-9860	¾" Barb *(Old Style)*	1000	0.77
715-9770	Cap Style - ⅜" RB	100	0.81
715-9850	⅜" Hose	100	0.50

FEATURES:

- Easy, snap together parts for quick assembly
- Packaged for retail sale
- 33" non-slip treads
- Made of durable UV protected polypropylene
- 800 lbs. weight capacity
- Available in multiple colors

NEW

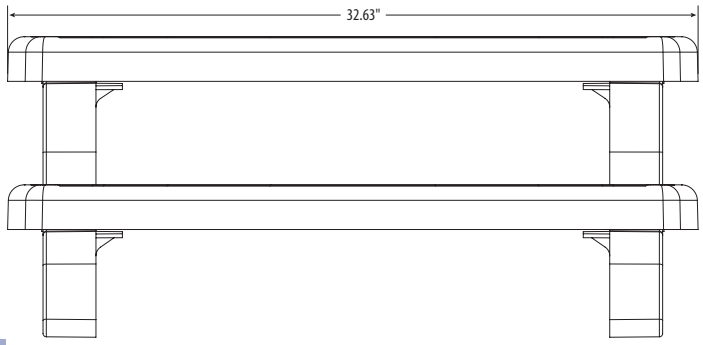

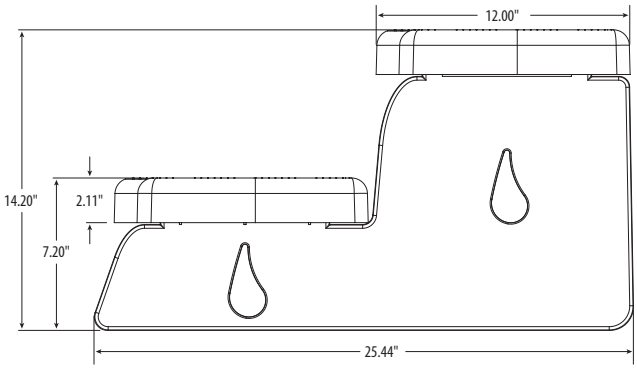

Spa Steps

Part No.	Description	Color	List (US $)
535-2209-BRK	33" Spa Step Assembly	Bark	169.95
535-2209-CIN	33" Spa Step Assembly	Cinnamon	169.95
535-2209-GPH	33" Spa Step Assembly	Graphite	169.95
535-2209-RDW	33" Spa Step Assembly	Redwood	169.95
535-2209-CSG	33" Spa Step Assembly	Coastal Gray	169.95

FEATURES:

- Low profile design
- Hose bib pulls out for easy access
- Protective cover seals against all possible leak points
- Optional metric adapter
- Plumbs to ¾" flex hose

600-9101 / 600-9167

Lo-Profile Spa Drain Fill Valve

Part No.	Description	Case Quantity	List (US $)
600-9101	Lo-Profile Drain Fill Valve Assembly	50	14.84
600-9167	Metric Hose Adapter with Gasket	200	2.22

640-2000

400-3031

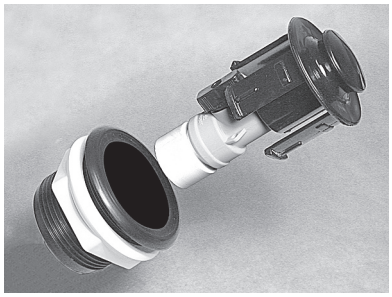

Spa Drain and Fill Niche for Garden Hose Connection

Part No.	Description	Case Quantity	List (US $)
640-2000	1" S - Spa Drain/Fill Valve Assembly - White	100	15.55
640-2001	1" S - Spa Drain/Fill Valve Assembly - Black	100	15.55
600-9101	¾" Lo-Profile Drain Fill Valve Assembly	50	15.29
600-9167	Lo-Profile Drain Fill Valve Metric Adapter with Gasket	200	2.29
400-3031	½" Hose On/Off Spa Drain Valve with Niche	100	18.53
400-3021	¾" Hose On/Off Spa Drain Valve with Niche	75	18.53

400-2060

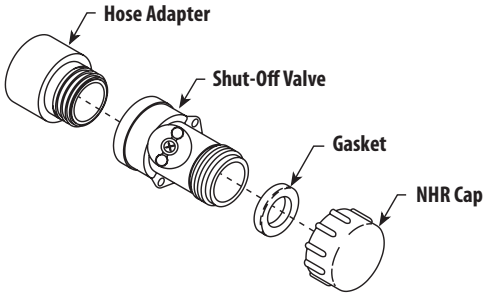

On/Off Valves for Garden Hose

Part No.	Description	Case Quantity	List (US $)
400-2060	½" Hose On/Off Valve Assembly	125	11.03
400-2070	¾" Hose On/Off Valve Assembly	125	11.03
519-0231	Drain Cap - ½" NHR	400	1.39
806-0100	Gasket - ¾"	250	1.03
872-0004	Shut-Off Valve	250	7.05
413-4400	Adapter - ½" S x Male Garden Hose	250	2.09
413-4410	Adapter - ¾" S x Male Garden Hose	200	2.09

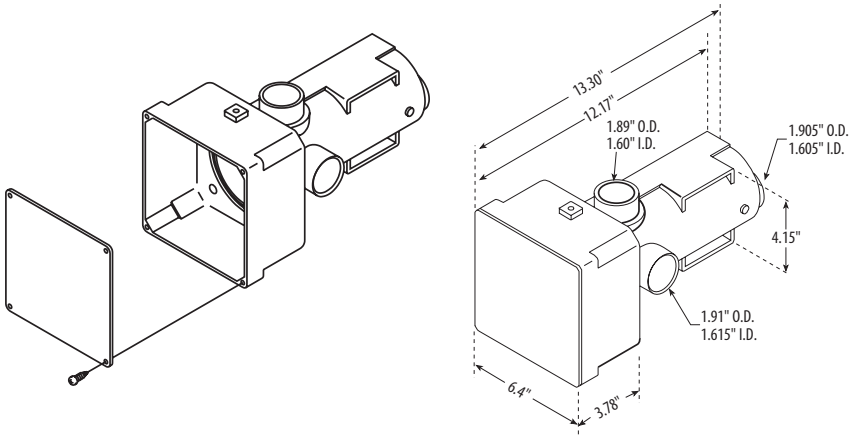

Heater Housing

Part No.	Description	Case Quantity	List (US $)
672-9900	1 ½" Spigot (3) - UL94 Flame Class - 94V-0 Polymer Heater Housing	6	67.63

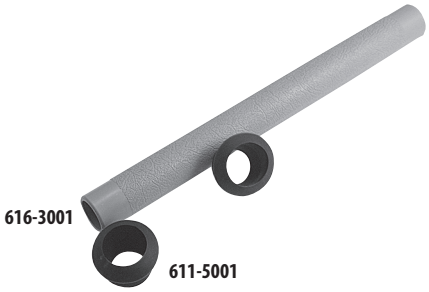

ABS Plastic Hand Rails

Part No.	Description	Case Quantity	List (US $)
616-4001	18" Hand Rail - Plastic - 1 ¼"	120	7.19
616-3001	12" Hand Rail - Plastic - 1 ¼"	170	4.54
611-5001	1 ¼" Rubber Grommet	300	1.69

Clear Acrylic Hand Rails

Part No.	Description	List (US $)
616-1100	11" Clear Acrylic Hand Rail	12.80
616-1300	13" Clear Acrylic Hand Rail	13.98
616-1400	14" Clear Acrylic Hand Rail	15.14
616-1600	16" Clear Acrylic Hand Rail	16.32
616-1800	18" Clear Acrylic Hand Rail	17.48
616-2000	20" Clear Acrylic Hand Rail	18.66
611-6090	Rubber Grommet *(no angle)*	2.31
611-7000	Rubber Grommet	2.51

FEATURES:

- Automatically adjusts to temperature change:
  Closed for cold or freezing conditions;
  Open for hot conditions
- Easy through-wall installation
- Louvered grill to protect against weather and rodent intrusion
- Hole Saw Size: 4"

Adjustable Thermo Vent

Part No.	Description	Case Quantity	List (US $)
675-6530	Adjustable Thermo Vent	300	18.03

FEATURES:

- 4 ¾" overall diameter
- 4" diameter hole saw and vent area
- 0.100" diameter holes (148) for improved ventilation
- Available in assorted colors

4" Vent

Part No.	Description	Case Quantity	List (US $)
672-0600	4" Vent	300	7.34

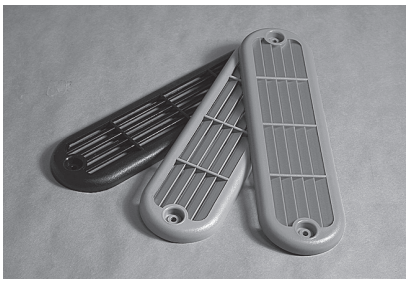

Spa Cabinet Vents

Part No.	Description	Color	Case Quantity	List (US $)
675-6501	Spa Vent Assembly – 2 5⁄16" x 8 ½"	Black	150	4.66
675-6507	Spa Vent Assembly – 2 5⁄16" x 8 ½"	Gray	150	4.66
675-6509-BRN	Spa Vent Assembly – 2 5⁄16" x 8 ½"	Brown	150	4.66

Aroma Therapy Canister and Beads

Part No.	Description	Case Quantity	List (US $)
670-2800	Aroma Therapy Canister Assembly - Ell Body	60	25.60
662-2700	Scented Aroma Therapy Beads - Ocean Pellets - .84 oz.	50	6.96
662-2710	Scented Aroma Therapy Beads - Kiwi - .76 oz.	50	6.96
662-2720	Scented Aroma Therapy Beads - Red Apple - .82 oz.	50	6.96
662-2730	Scented Aroma Therapy Beads - Floral - .86 oz.	50	6.96

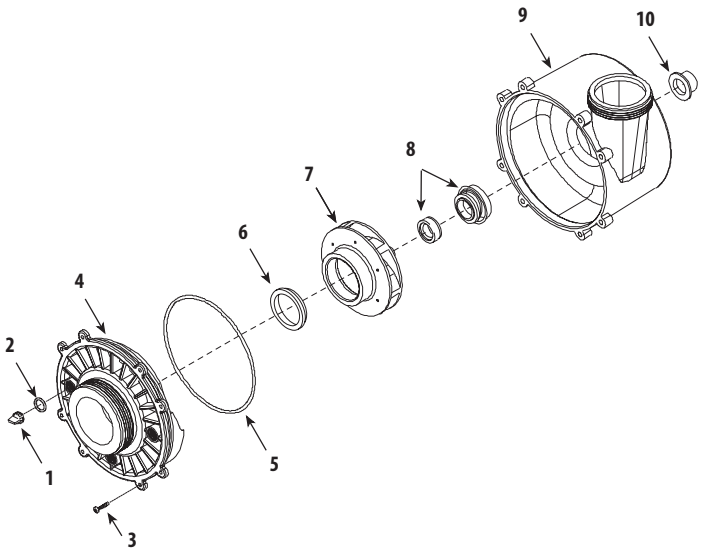

Executive 56-Frame Wet End Replacement Parts

Item	P art No.	Description	List (US $)
1	**715-1201**	⅜" Quarter Slot Plug - Air Relief	2.18
2	**805-0112**	O-Ring - #111 - Pump Drain Plug	0.49
3	**819-1110**	Screw - #8 - 32 x 7⁄16" PPH	1.24
4	**311-1210**	Executive Faceplate 2 ½"	40.38
	311-1220	Executive Faceplate 2"	40.38
5	**805-0261**	O-Ring 261 - Volute for Executive Faceplate	4.06
6	**319-1370**	Wear Ring - Executive Pump 4 & 5 HP	5.72
	319-1380	Wear Ring - Executive Pump ¾, 1, 2, and 3 HP	5.72
7	**310-4220**	1 HP Impeller Assembly	27.94
	310-4210	2 HP Impeller Assembly	27.94
	310-4200	3 HP Impeller Assembly	27.94
	310-4190	4 HP Impeller Assembly	27.94
	310-4180	5 HP Impeller Assembly	27.94
8	**319-3100B**	Pump Seal Set	20.40
9	**315-1220**	Executive Volute 56-Frame with Inserts	38.41
10	**313-1400**	Slinger	1.06

Executive 48-Frame Wet End Replacement Parts

Item	Part No.	Description	List (US $)
1	**715-1201**	⅜" Quarter Slot Plug - Air Relief	2.18
2	**805-0112**	O-Ring - #111 - Pump Drain Plug	0.49
3	**819-1110**	Screw - #8 - 32 x 7⁄16" PPH	1.24
4	**311-1210**	Executive Faceplate 2 ½"	40.38
	311-1220	Executive Faceplate 2"	40.38
5	**805-0261**	O-Ring 261 - Volute for Executive Faceplate	4.06
6	**319-1370**	Wear Ring - Executive Pump 4 & 5 HP	5.72
	319-1380	Wear Ring - Executive Pump ¾, 1, 2 and 3 HP	5.72
7	**310-4230**	1 HP Motor - ¾ HP Impeller Assembly	27.94
	310-4220	1 ½ HP Motor - 1 HP Impeller Assembly	27.94
	310-4210	2 HP Motor - 2 HP Impeller Assembly	27.94
	310-4210	3 HP Motor - 2 HP Impeller Assembly	27.94
	310-4200	4 HP Motor - 3 HP Impeller Assembly	27.94
8	**319-3100B**	Pump Seal Set	20.40
9	**315-1240**	Executive Volute 48-Frame with Inserts	31.82
10	**313-1400**	Slinger	1.06

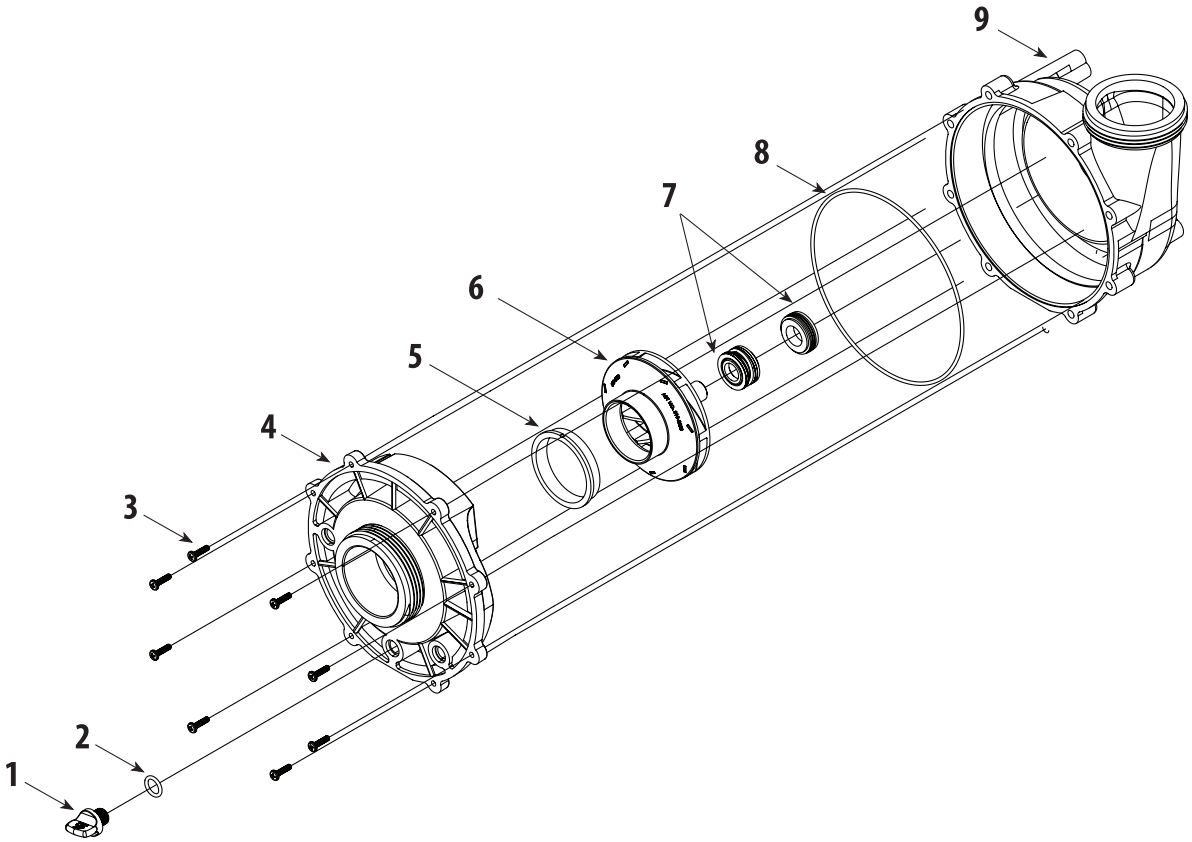

EX2 Wet End Replacement Parts			
Item	Part No.	Description	List (US $)
1	**715-4020**	Pump Drain Plug	2.18
2	**805-0112**	O-Ring - Pump Drain Plug	0.49
3	**819-1110**	Screw #8-32	1.24
4	**311-2311**	Volute Faceplate	40.38
5	**319-1270**	Wear Ring	5.72
6	**310-2330**	Impeller Assembly - 1 ½ HP	27.94
	310-2340	Impeller Assembly - 2 HP	27.94
	310-2300	Impeller Assembly - 2 ½ HP	27.94
	310-2350	Impeller Assembly - 3 HP	27.94
7	**319-3010B**	Pump Seal Kit	21.57
8	**805-0164**	O-Ring #164	4.35
9	**315-2301**	Volute Housing	38.41

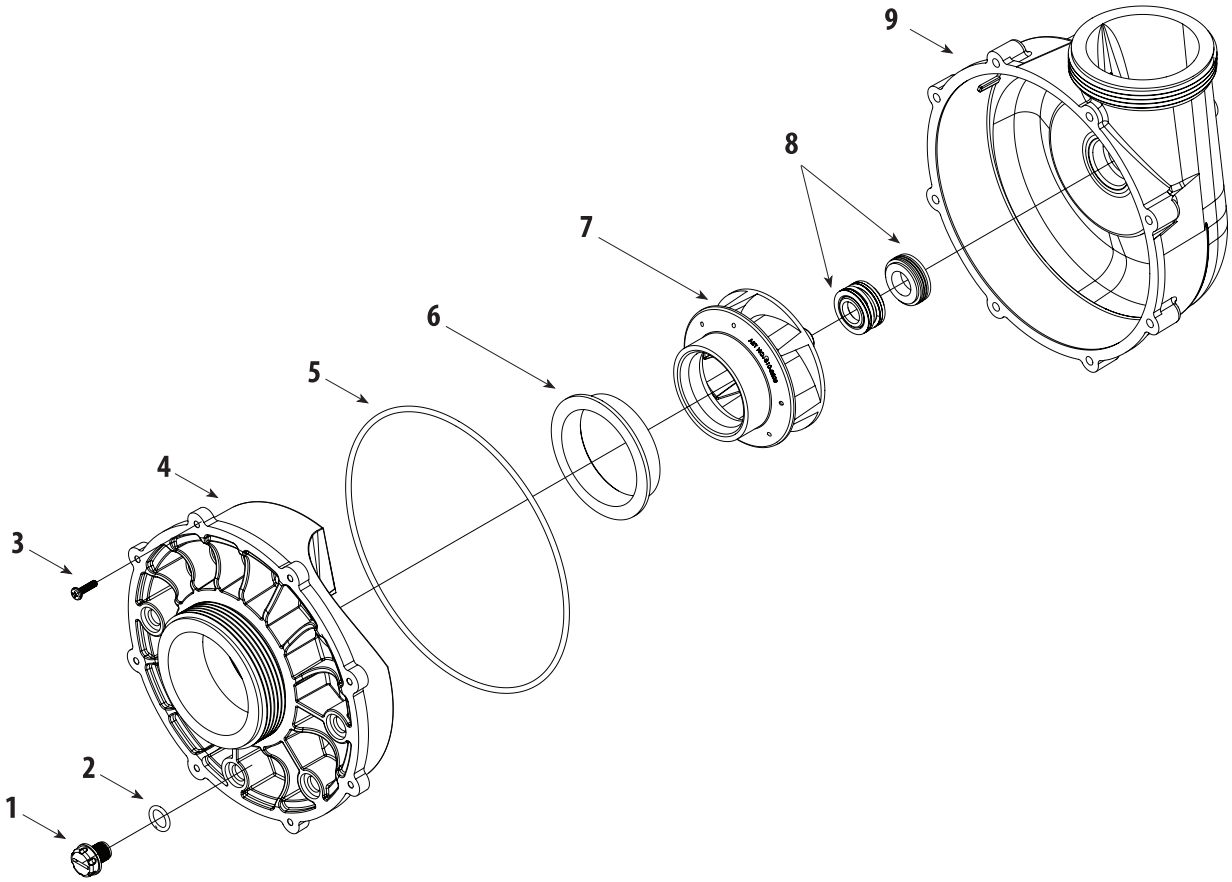

Viper Wet End Replacement Parts

Item	Part No.	Description	List (US $)
1	**715-1201**	⅜" Quarter Slot Pump Drain Plug	2.18
2	**805-0112**	O-Ring - Pump Drain Plug	0.49
3	**819-1110**	Screw #8-32	1.24
4	**311-1510**	Volute Faceplate	40.38
5	**805-0264**	Volute O-Ring	5.25
6	**313-3210**	Wear Ring	5.72
7	**310-2260**	Impeller Assembly - 2 HP	27.94
	310-2270	Impeller Assembly - 3 HP	27.94
	310-2200	Impeller Assembly - 4 HP	27.94
	310-2280	Impeller Assembly - 5 HP	27.94
8	**319-3010B**	Pump Seal Kit	21.55
9	**315-1500**	Volute	46.87

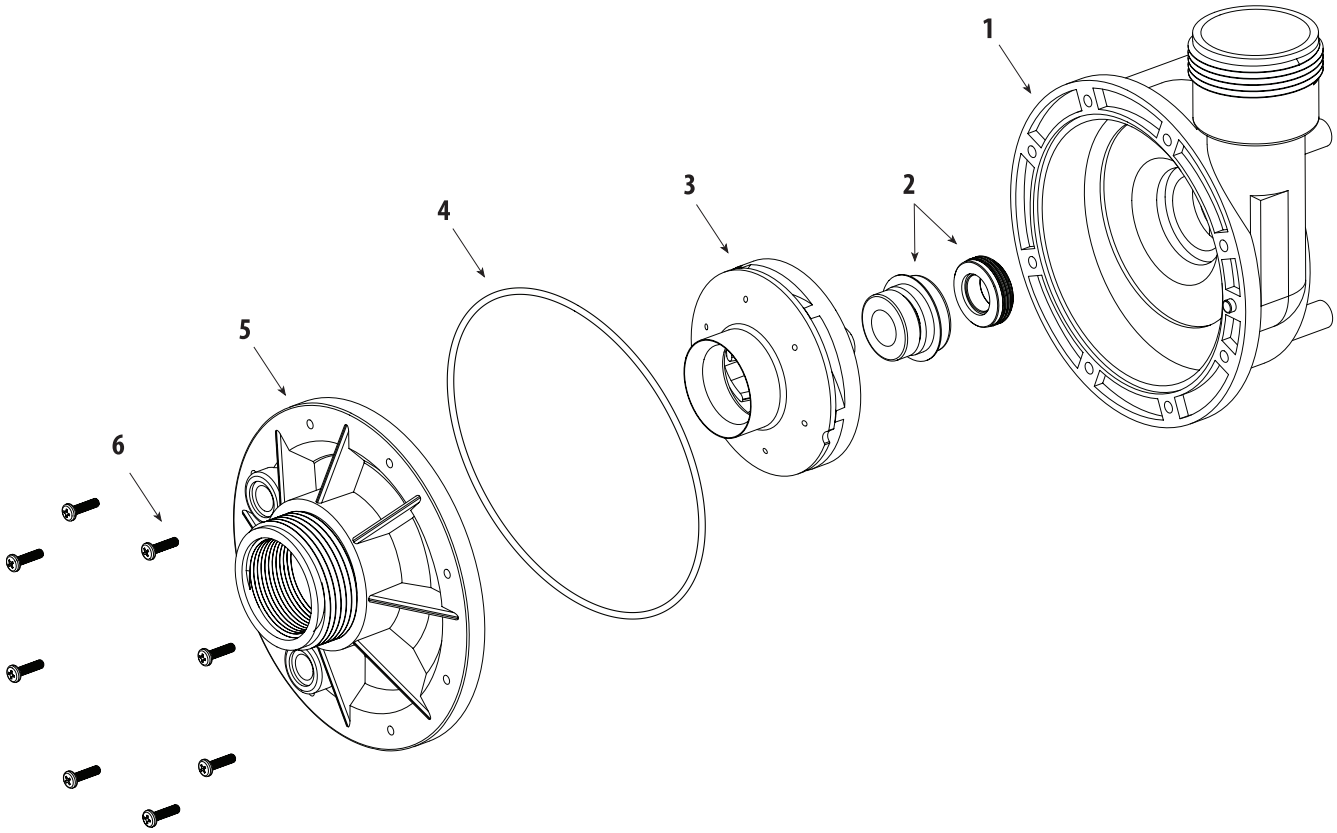

Spa Flo and Iron Might Wet End Replacement Parts			
Item	Part No.	Description	List (US $)
1	**315-1060**	Volute	40.94
2	**319-3100B**	Puma Seal Kit	19.76
3	**310-0900**	Iron Might Impeller Assembly	24.13
	310-4060	Spa Flo Impeller Assembly - 1 HP	24.13
	310-4070	Spa Flo Impeller Assembly - 1.5 HP	24.13
	310-4090	Spa Flo Impeller Assembly - 2 HP	24.13
4	**805-0248**	Volute O-Ring	7.80
5	**311-1060**	Faceplate	30.75
6	**819-1110**	#8-32 Screw *(8 required)*	1.24

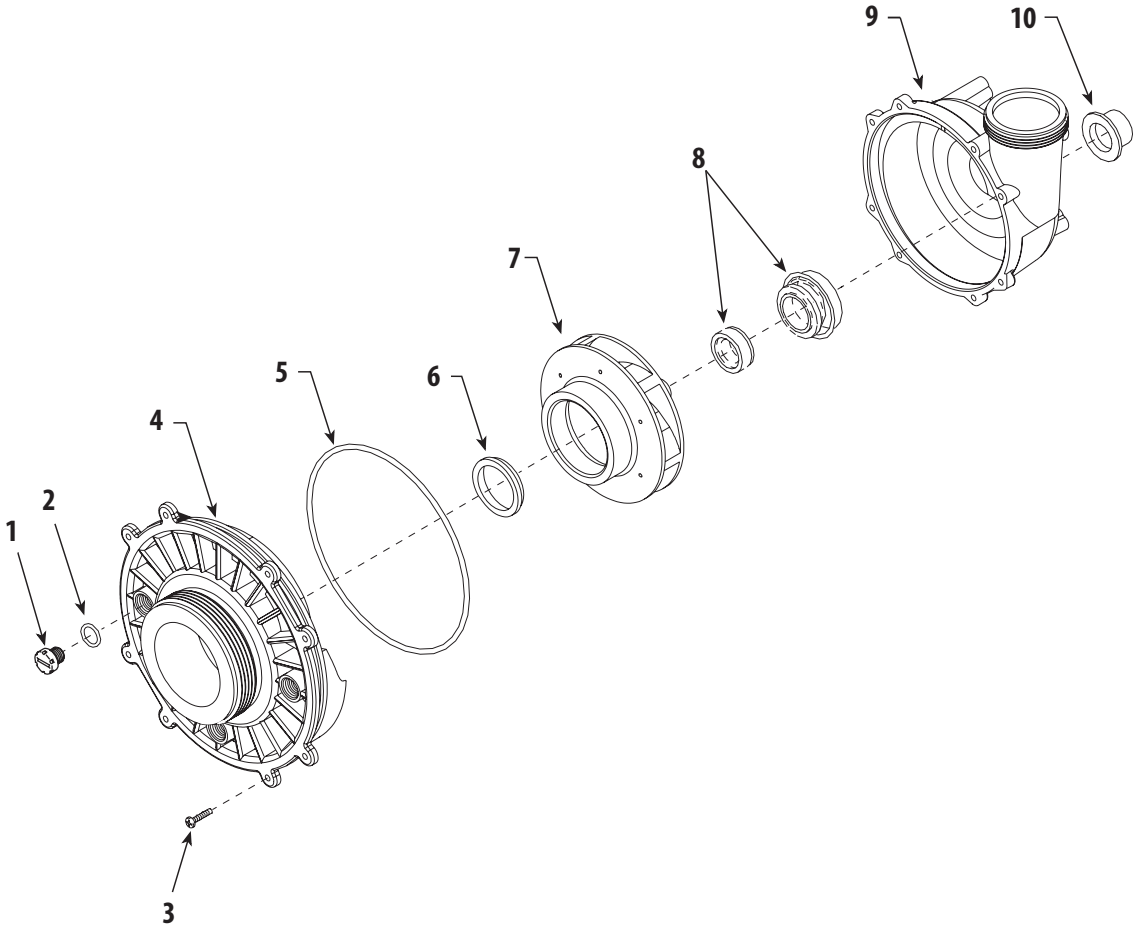

Hi-Flo Side Discharge Wet End Replacement Parts

Item	Part No.	Description	List (US $)
1	**715-1201**	⅜" Quarter Slot Drain Plug	2.18
2	**805-0112**	O-Ring - Pump Drain Plug	0.49
3	**819-1110**	Screw	1.24
4	**311-2140**	2" Intake Faceplate	30.75
5	**805-0256**	O-Ring - Faceplate	4.34
6	**319-1390**	Wear Ring	6.58
7	**310-4000**	1 HP Impeller "C" Assembly	24.13
	310-4010	1 ½ HP Impeller "D" Assembly	24.13
	310-4030	2 HP Impeller Assembly	24.13
	310-4020	3 HP Impeller Assembly	24.13
	310-4050	4 HP Impeller Assembly	24.13
8	**319-3100B**	Pump Seal Kit	20.40
9	**315-2500**	Side Discharge Volute with Inserts	40.94
10	**313-1400**	Slinger	1.06

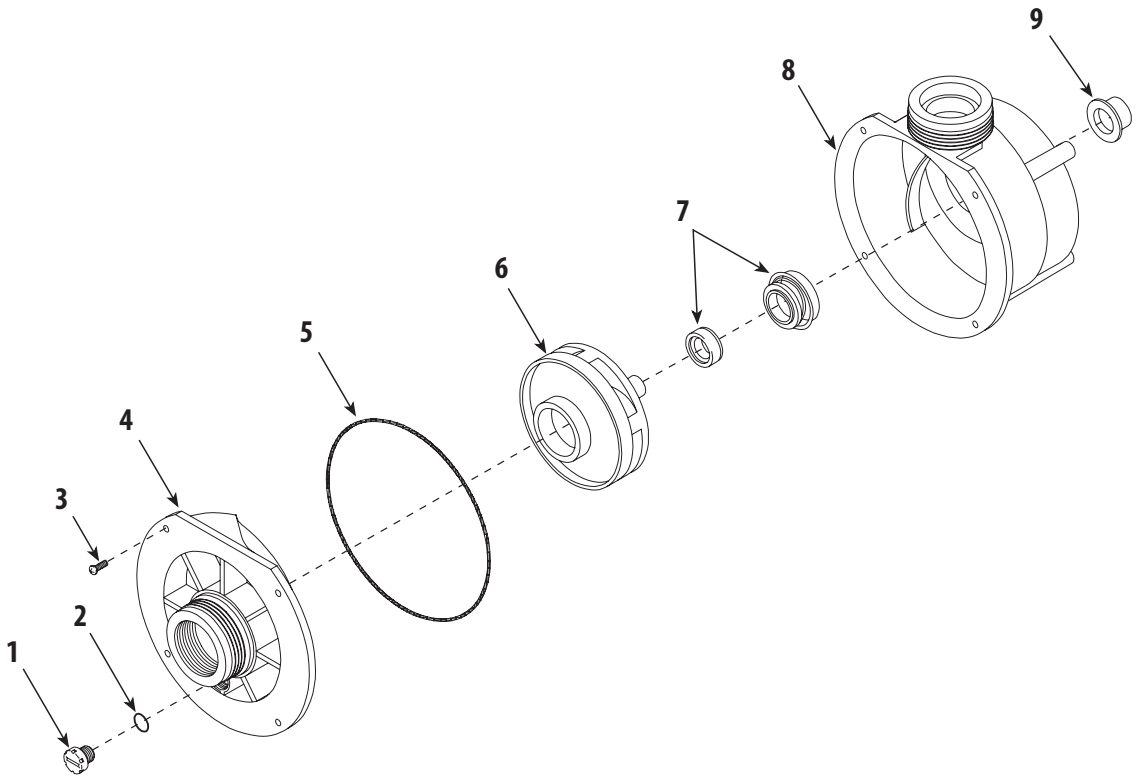

Center Discharge Wet End Replacement Parts

Item	Part No.	Description	List (US $)
1	**715-1201**	⅜" Quarter Slot Drain Plug	2.18
2	**805-0112**	O-Ring - Pump Drain Plug	0.49
3	**819-1110**	Screw #8-32	1.24
4	**311-1110**	Faceplate - Spa Series	30.75
5	**805-0252**	O-Ring - Faceplate	4.06
6	**310-5120**	¾ HP Impeller Assembly	24.13
	310-5130	1 HP Impeller Assembly	24.13
	310-5140	1 ½ HP Impeller Assembly	24.13
	310-5200	2 HP Impeller Assembly	24.13
7	**319-3100B**	Pump Seal Kit	20.40
8	**315-1120**	Spa & Bath Volute	40.94
9	**313-1400**	Slinger	1.06

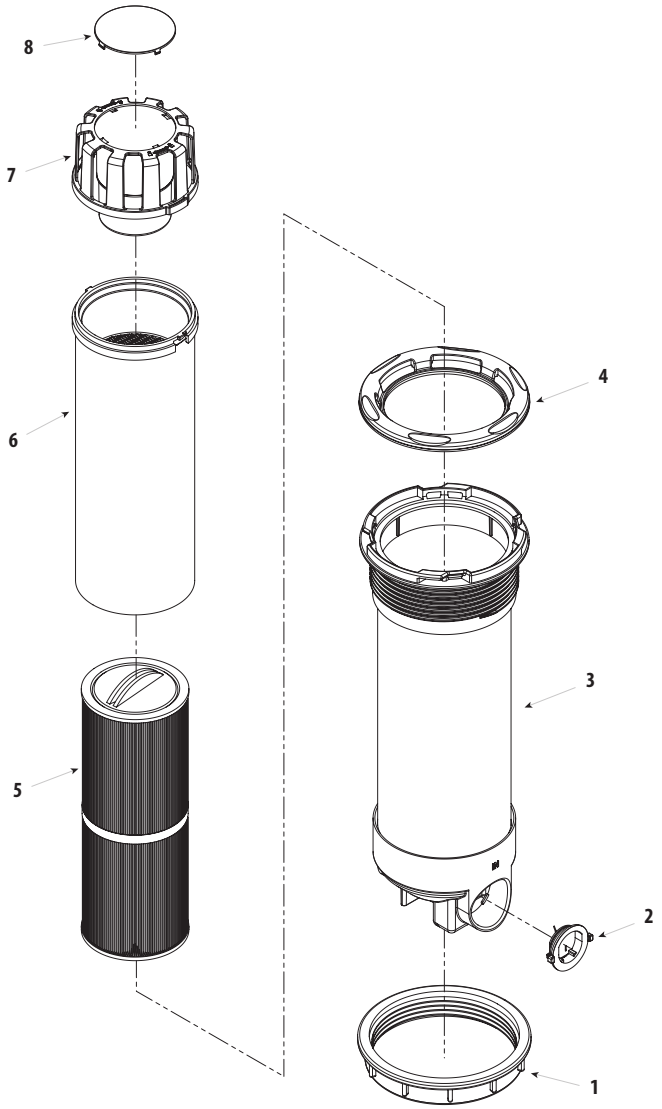

Teleweir			
Item	Part No.	Description	List (US $)
1	**718-1000**	Top-Mount Filter Nut	12.62
2	**600-1040**	2" Bypass Valve	8.30
3	**550-5735-1**	35 sq. ft. Teleweir Body Assembly	68.67
	550-5750-1	50 sq. ft. Teleweir Body Assembly	68.67
	550-5775-1	75 sq. ft. Teleweir Body Assembly	68.67
4	**519-8310**	Teleweir Trim Ring - 6-Scallop	14.63
5	**817-4035**	35 sq. ft. Teleweir Cartridge	43.07
	817-4050	50 sq. ft. Teleweir Cartridge	69.53
	817-4075	75 sq. ft. Teleweir Cartridge	99.26
6	**550-5835-1**	35 sq. ft. Inner Pipe & Basket Assembly	34.33
	550-5850-1	50 sq. ft. Inner Pipe & Basket Assembly	34.33
	550-5875-1	75 sq. ft. Inner Pipe & Basket Assembly	34.33
7	**550-5735-1**	35 sq. ft. Outer Pipe & Upper Weir Assembly	68.67
	550-5750-1	50 sq. ft. Outer Pipe & Upper Weir Assembly	68.67
	550-5775-1	75 sq. ft. Outer Pipe & Upper Weir Assembly	68.67
8	**519-0300**	Teleweir Cap	3.50

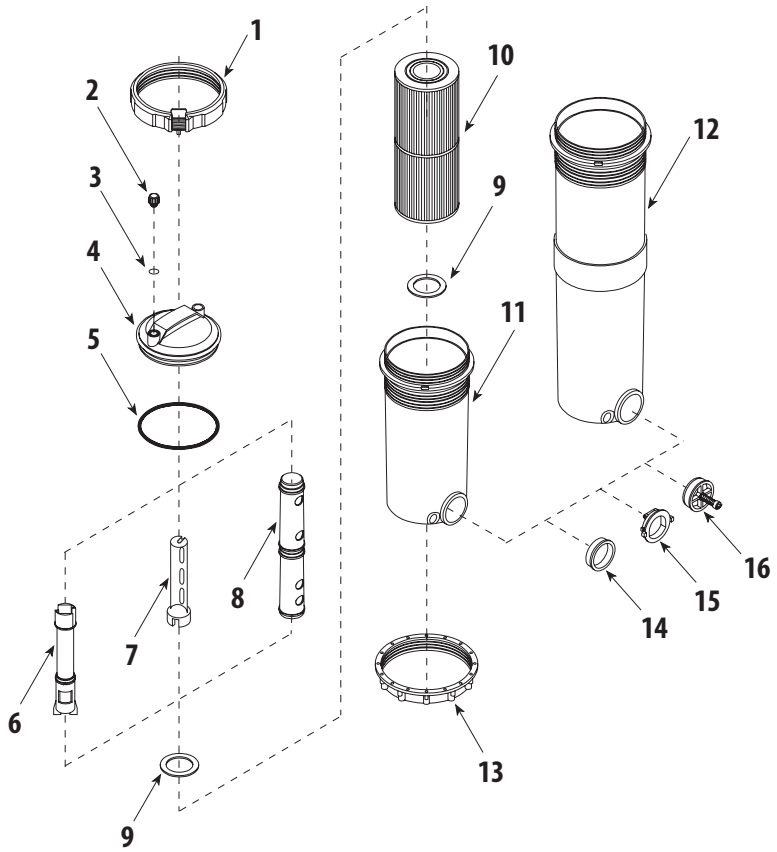

1 ½" and 2" Top-Load Filter Replacement Parts

Item	Part No.	Description	List (US $)
1	**500-1000**	Lock Ring Assembly	15.08
2	**715-1001**	Plug - Air Relief	2.54
3	**805-0114**	O-Ring - Air Relief Plug	0.49
4	**511-1000**	Filter Lid with Handle	25.18
5	**805-0360**	O-Ring - Filter Lid	4.88
6	**500-1070**	Brominator Assembly - 10 Tablet	23.91
7	**519-1051**	Mineral Purifier Canister Holder	23.91
8	**500-1060**	Flow Restriction Tube	15.08
9	**711-1010**	Spacer Ring	2.54
10	**817-2500**	Filter Cartridge - 25 sq. ft. - 4 15⁄16" OD x 13 5⁄16" L	46.61
	817-5000	Filter Cartridge - 50 sq. ft. - 4 15⁄16" OD x 13 5⁄16" L	67.02
	817-7500	Filter Cartridge - 75 sq. ft. - 4 15⁄16" OD x 23 5⁄8" L	92.32
	817-1000	Filter Cartridge - 100 sq. ft. - 4 15⁄16" OD x 23 5⁄8" L	101.31
11	**550-5000**	1 ½" Filter Body - with Bypass	94.39
	550-4990	1 ½" Filter Body - with Plug	94.39
	550-5010	2" Filter Body - with Bypass	94.39
	550-5060	2" Filter Body - with Plug	94.39
12	**550-5110**	1 ½" Extended Filter Body - with Bypass	142.33
	550-5150	1 ½" Extended Filter Body - with Plug	142.33
	550-5230	2" Extended Filter Body - with Bypass	151.96
	550-5220	2" Extended Filter Body - with Plug	151.96
13	**718-1000**	Nut - Filter Body	12.62
14	**715-1010**	1 ½" Plug	2.54
	715-9900	2" Plug	2.54
15	**600-1040**	2" Bypass Valve Assembly	8.30
16	**600-1000**	1 ½" Bypass Valve Assembly	8.30

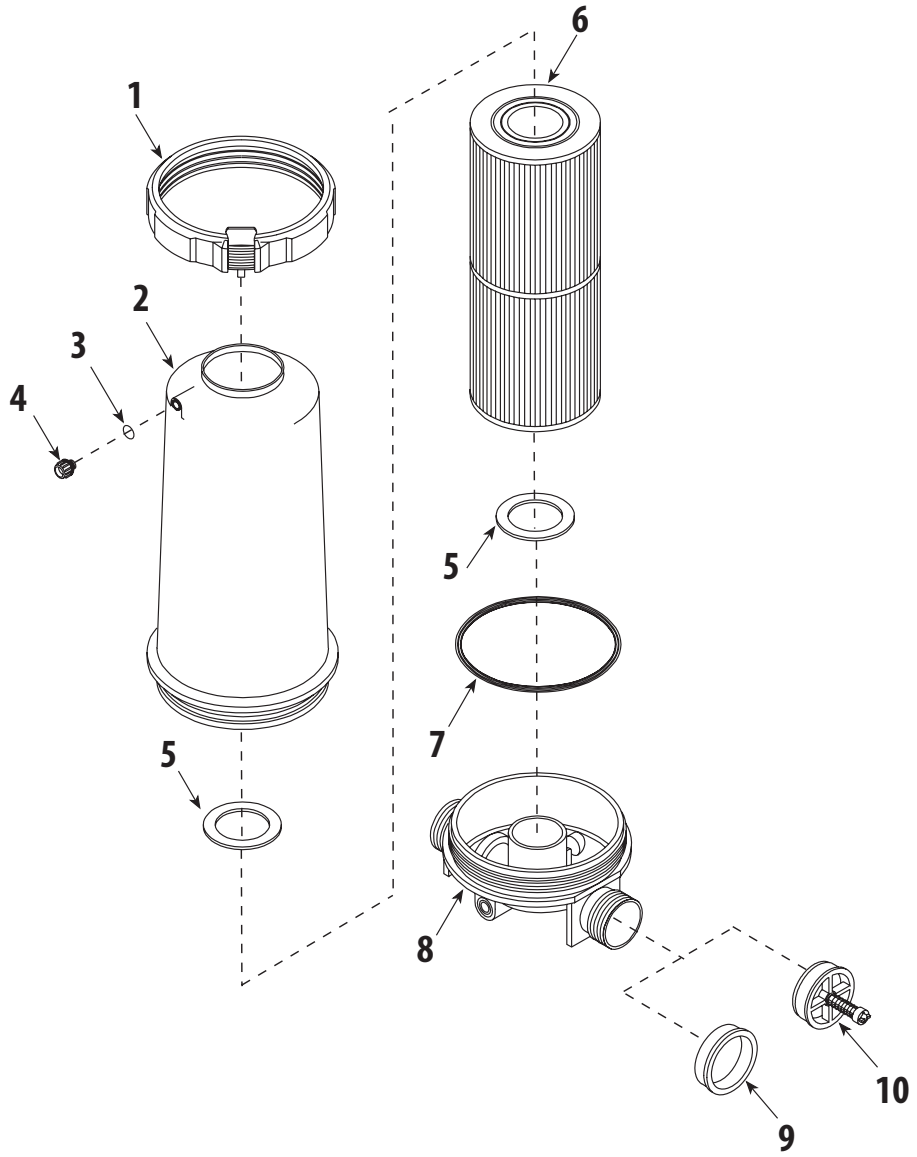

1 ½" In-Line Filter Replacement Parts			
Item	Part No.	Description	List (US $)
1	**500-1000**	Lock Ring Assembly	15.08
2	**515-1010**	In-line Filter Body	85.56
3	**805-0114**	O-Ring - Air Relief Plug	0.49
4	**715-1001**	Plug - Air Relief	2.54
5	**711-1010**	Spacer Ring	2.54
6	**817-2500**	Filter Cartridge - 25 sq. ft. - 4 15⁄16" OD x 13 5⁄16" L	46.61
	817-5000	Filter Cartridge - 50 sq. ft. - 4 15⁄16" OD x 13 5⁄16" L	67.02
7	**805-0360**	O-Ring - Filter Lid	4.88
8	**511-1010**	1 ½" Filter Lid	15.10
9	**715-1010**	1 ½" Plug	2.54
10	**600-1000**	1 ½" Bypass Valve	8.30

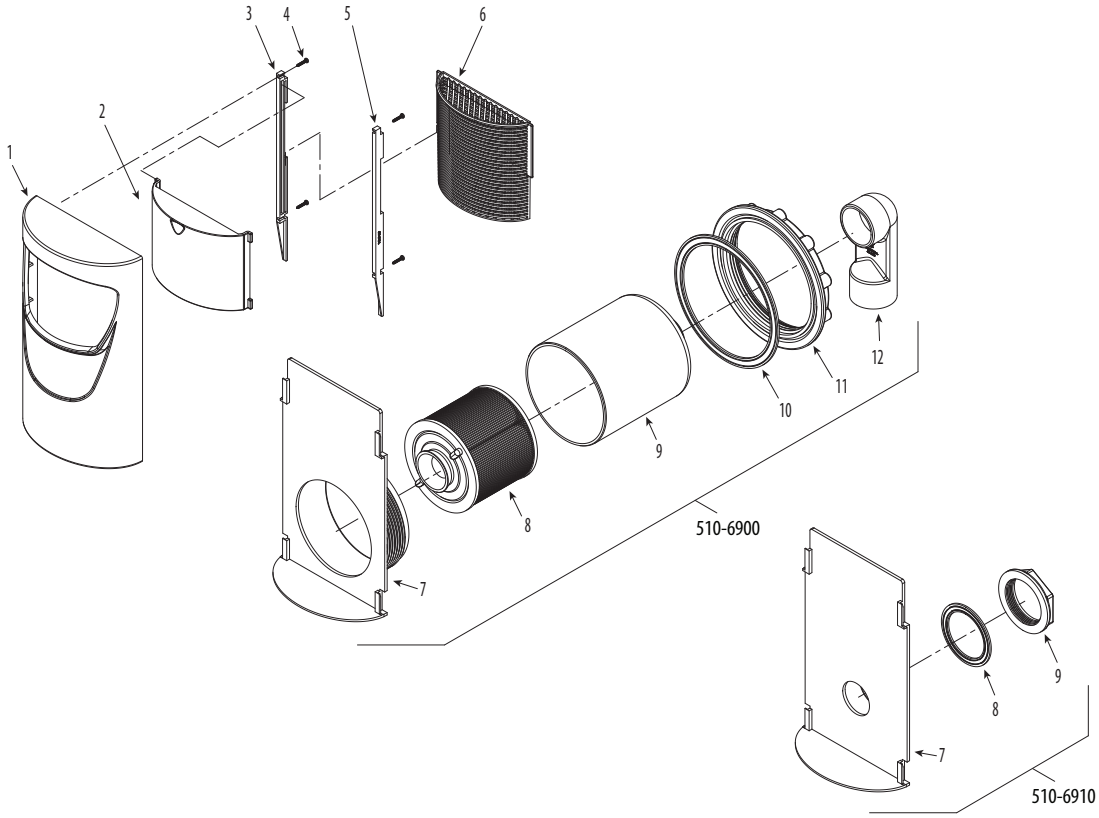

510-6910 - Deluxe Strip Skimmer Replacement Parts

Item	Part No.	Description	List (US $)
1	**519-6900**	Weir Frame	20.60
2	**550-6910**	Weir Door Assembly	15.55
3	**519-6940.R**	Guide Frame - Right	3.40
4	**819-0114**	Screw *(4 required)*	0.15
5	**519-6940.L**	Guide Frame - Left	3.40
6	**519-6950**	Basket	12.01
7	**519-6980**	Weir Plate Outlet	16.07
8	**711-4350**	Wall Fitting Gasket	0.50
9	**718-3150**	Wall Fitting Nut	2.53

510-6900 - Deluxe Skim FIlter Replacement Parts

Item	Part No.	Description	List (US $)
1	**519-6900**	Weir Frame	20.60
2	**550-6910**	Weir Door Assembly	15.10
3	**519-6940.R**	Guide Frame - Right	3.40
4	**819-0114**	Screw *(4 required)*	0.15
5	**519-6940.L**	Guide Frame - Left	3.40
6	**519-6950**	Basket	12.01
7	**519-6960**	Weir Plate Outlet	18.03
8	**817-0009**	10 sq. ft. Cartridge	31.90
9	**519-6970**	Weir Filter Housing	10.51
10	**711-7000**	Wall Fitting Gasket	4.99
11	**718-7000**	Wall Fitting Nut	12.34
12	**411-6900**	90° Ell - 1 ½" S x 1 ½" S	12.88

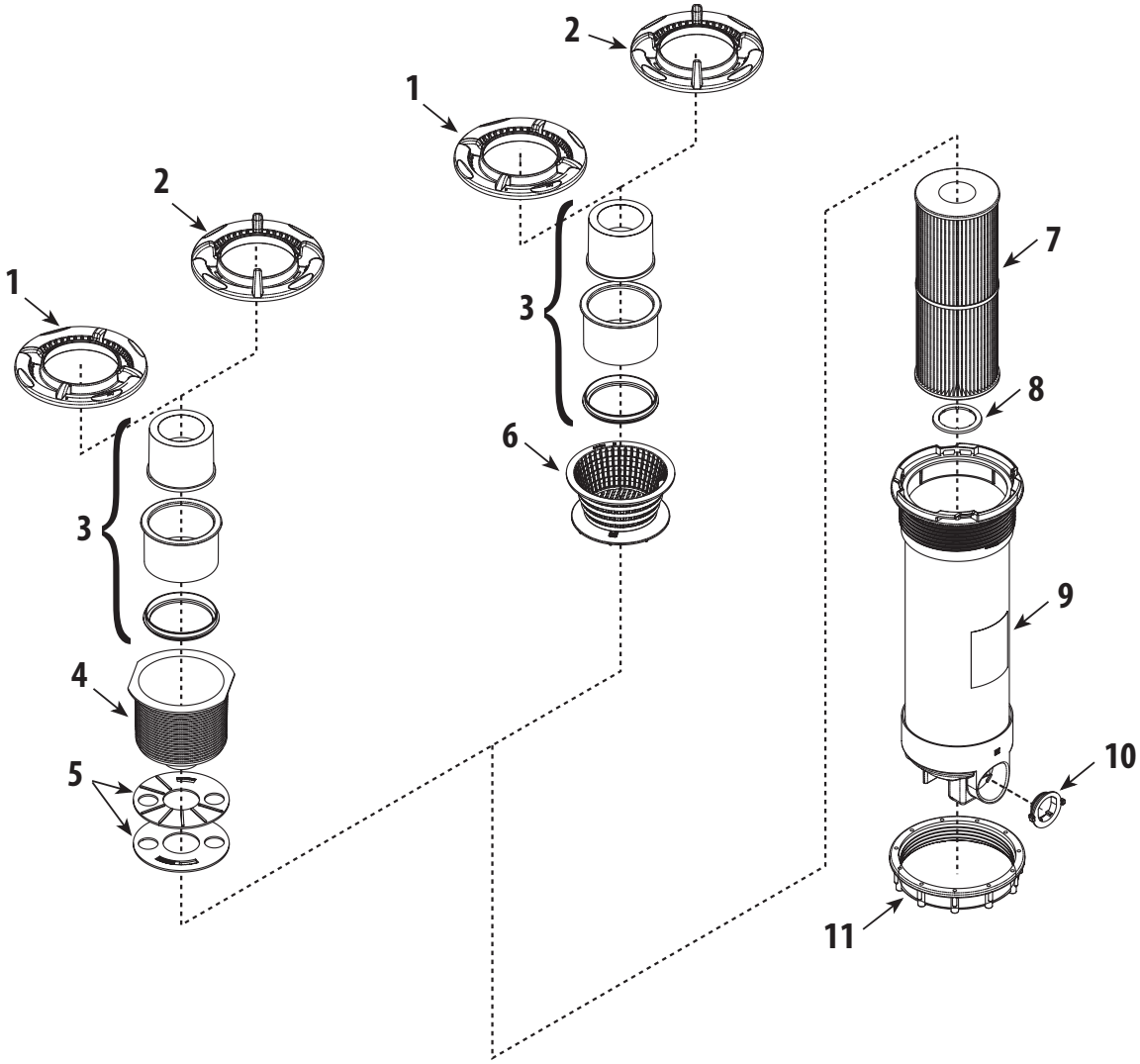

Dyna-Flo Top Mount Skim Filter Replacement Parts

Item	Part No.	Description	List (US $)
1	**519-8070**	4-Scallop Trim Ring - Low Volume - White	13.42
2	**519-8050**	4-Scallop Trim Ring - High Volume - White	10.64
3	**550-2630**	Weir Assembly - 3-Piece - White	21.67
4	**519-8000**	Basket - White - 6.4" diameter x 5.62" H	9.77
5	**519-3010**	Diverter Plate	7.55
6	**500-2680**	Low Profile Basket Assembly - White - 6.35" diameter x 2.75" H	26.57
7	**817-2500**	Filter Cartridge - 25 sq. ft. - 4 15⁄16" OD x 13 5⁄16" L	46.61
	817-3501	Filter Cartridge - 40 sq. ft. - 4 15⁄16" OD x 9 1⁄4" L	44.22
	817-5000	Filter Cartridge - 50 sq. ft. - 4 15⁄16" OD x 13 5⁄16" L	67.02
8	**711-1010**	Spacer Ring	2.54
9	**--**	Body	--
10	**600-1040**	2" Bypass Valve	8.30
11	**718-1000**	Nut - Filter Body	12.62

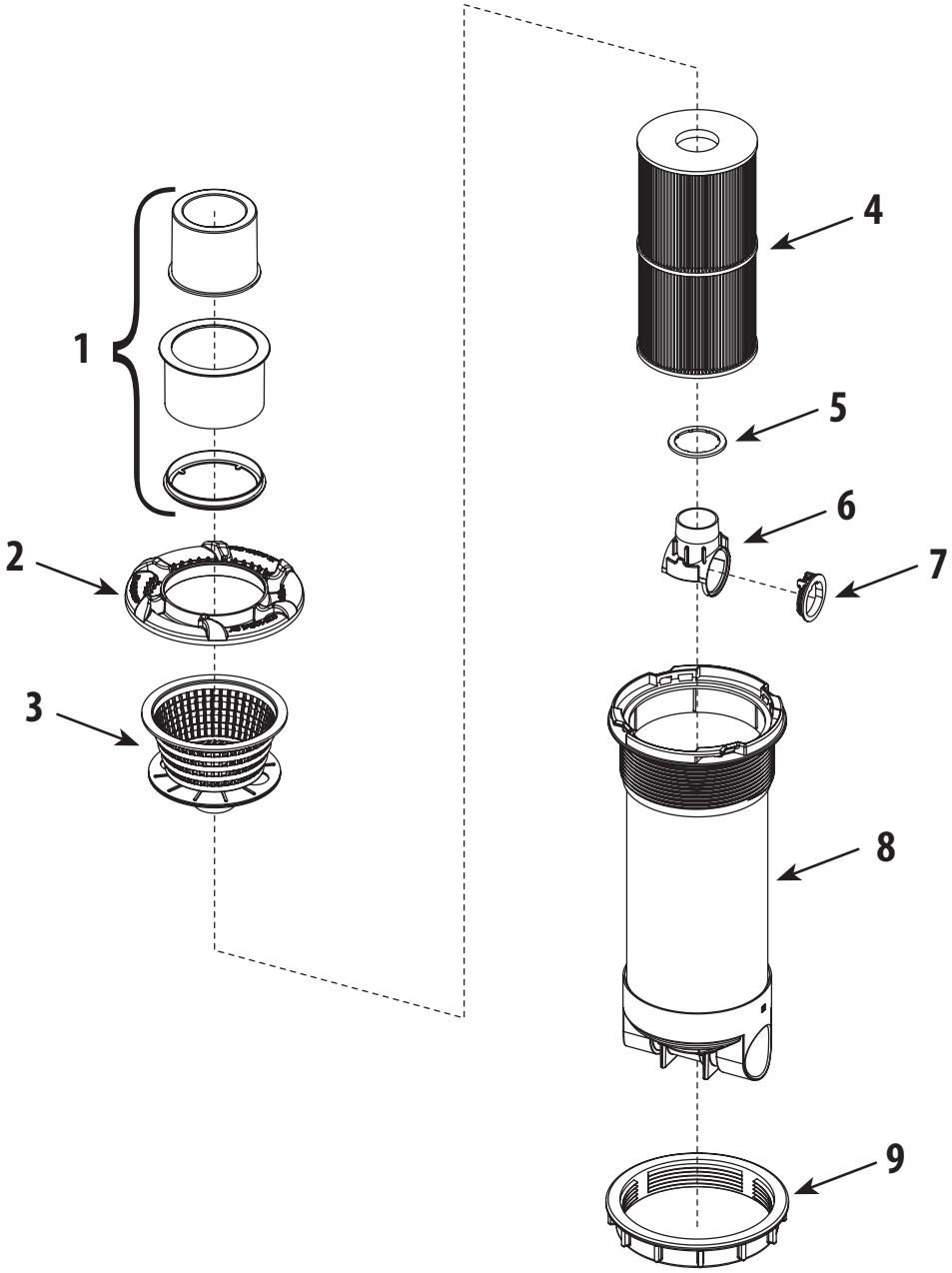

Dyna-Flo XL Skim Filter Replacement Parts

Item	Part No.	Description	List (US $)
1	**550-8620**	Weir Assembly	28.17
2	**519-8260**	Scalloped Trim Ring	14.63
3	**550-8631**	Basket Assembly - Black - 8.0" diameter x 3.5" H	38.60
4	**817-0017**	Dyna-Flo XL Cartridge - 50 sq. ft. - 2 3/8" x 6 9/16" OD x 13 5/16" L	96.19
	817-0018	Dyna-Flo XL Cartridge - 75 sq. ft. - 2 3/8" x 6 9/16" OD x 13 5/16" L	122.81
	817-0019	Dyna-Flo XL Cartridge - 100 sq. ft. - 2 3/8" x 6 9/16" OD x 17 13/16" L	152.83
5	**711-8200**	Spacer Ring	9.02
6	**602-8210**	Bottom Body Insert with Bypass Valve	15.59
7	**600-1020**	2 1/2" Bypass Valve	8.30
8	**--**	Body	--
9	**718-8200**	Nut	15.77

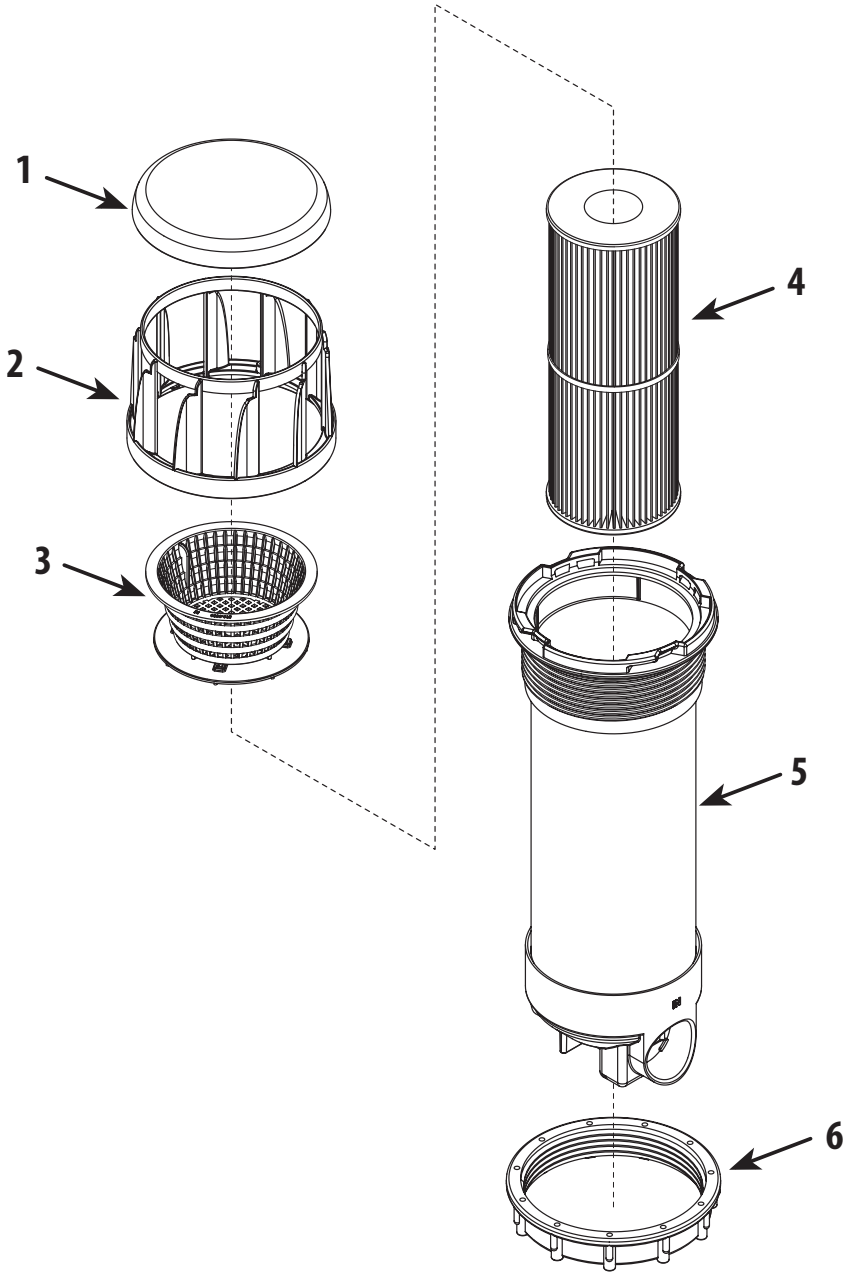

Ultra Skim Filter Replacement Parts

Item	Part No.	Description	List (US $)
1	**519-8160**	Lid	17.54
2	**519-8150**	Turbine	46.78
3	**500-2697**	Basket Assembly - 6.35" diameter x 2.75" H	26.57
4	**817-2500**	Filter Cartridge - 25 sq. ft. - 4 15⁄16" OD x 13 5⁄16" L	46.61
	817-3501	Filter Cartridge - 40 sq. ft. - 4 15⁄16" OD x 9 1⁄4" L	44.22
	817-5000	Filter Cartridge - 50 sq. ft. - 4 15⁄16" OD x 13 5⁄16" L	67.02
5	**--**	Body	--
6	**718-1000**	Filter Body Nut	12.62

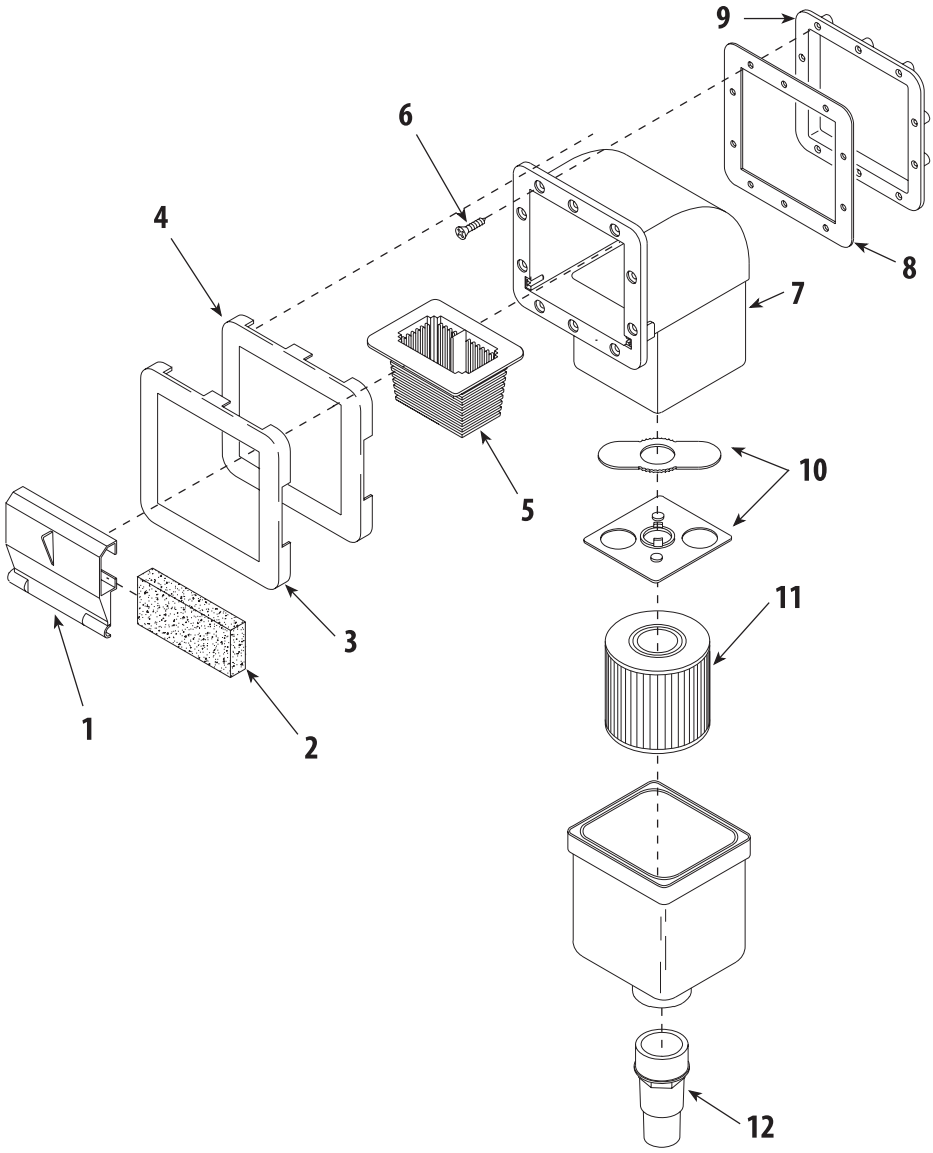

Spa Skimmer and Skim Filter Replacement Parts

Item	Part No.	Description	List (US $)
1	**519-4050**	Floating Weir - Square Door	12.09
2	**865-1000**	Foam - Weir - 0.86" x 2.35" x 5.5"	3.99
3	**916-1010**	Stainless Steel Escutcheon *(optional)*	25.18
4	**519-4090**	Square Trim Plate - Plastic - Old Style	12.59
5	**519-4030**	Basket - 4.80" x 5.10" x 3.45" H	10.56
6	**819-6930**	Screw - #8 x 1 ½" Flathead Phillips	0.49
7	**550-4060**	1 ½" Square Body with Base	46.56
	550-4080	1 ½" Square Body - 10 sq. ft. Skim Filter	71.88
	550-4090	1 ½" Square Body - 20 sq. ft. Skim Filter	102.41
8	**806-1070**	Gasket - Mounting Plate	2.72
9	**519-1600**	Mounting Plate *(optional)*	12.55
10	**550-1500**	Diverter Plate Assembly	17.36
11	**817-0010**	Filter Cartridge - 10 sq. ft. - 4 ¼" OD x 4" L	29.32
12	**417-6080**	Hose Adapter Fitting - 1 ½" Spigot x 1 ¼" Hose *(optional)*	1.93

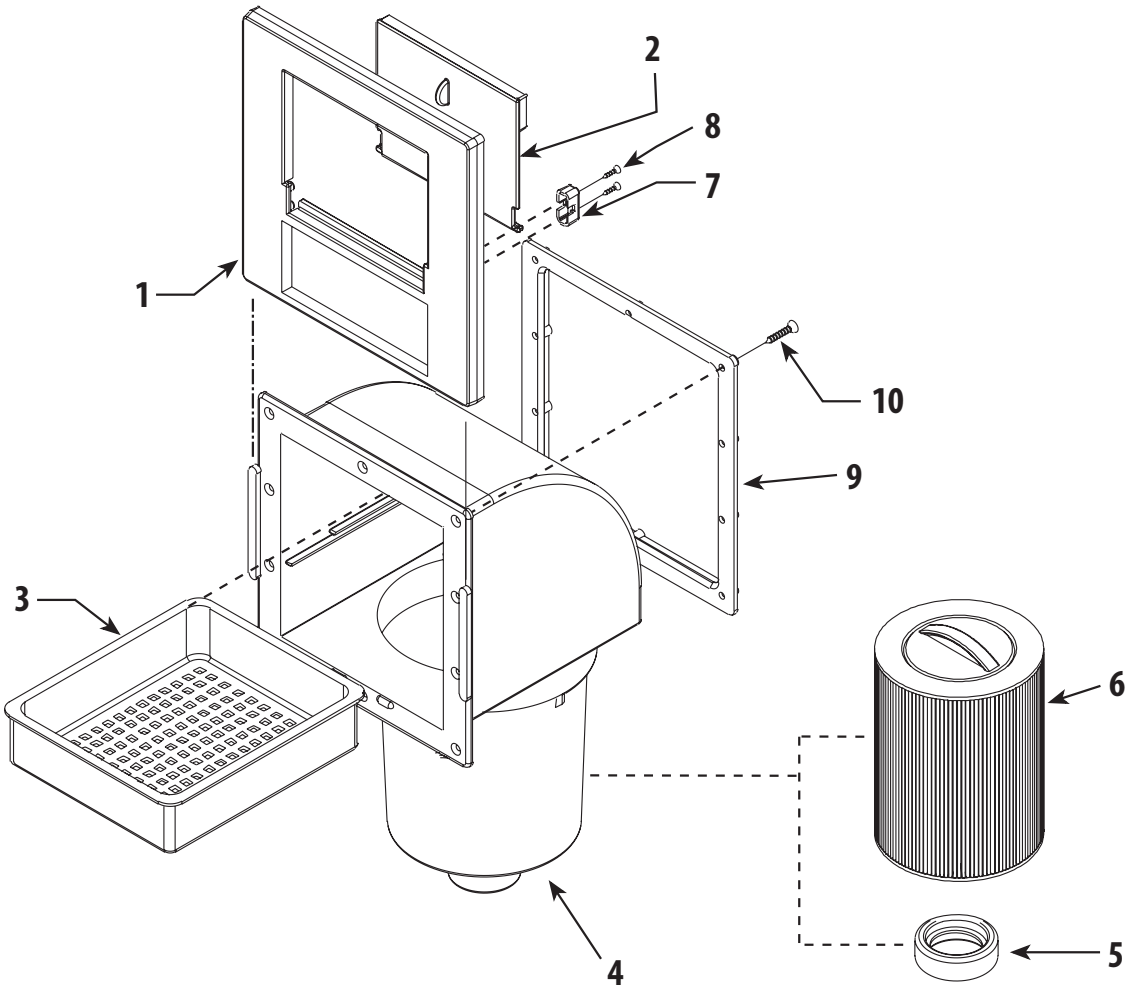

50 sq. ft. Skim Filter Replacement Parts			
Item	Part No.	Description	List (US $)
1	**519-9010**	Front Plate	37.39
2	**550-9000**	Weir Door Assembly	22.10
3	**519-9050**	Basket	15.01
4	**550-9010**	Filter Body Assembly - 50 sq. ft.	90.38
5	**519-6640**	Retainer Ring	10.71
6	**817-0050**	50 sq. ft. Filter Cartridge - 6" OD x 8 ¼" L	66.65
7	**519-6240**	Hinge Mount	0.69
8	**819-3260**	Screw - #6 - 20 x ⅝" POH	0.12
9	**519-9040**	Mounting Plate	10.90
10	**819-0006**	Screw - #12 x 1 ¼" PFH	0.55

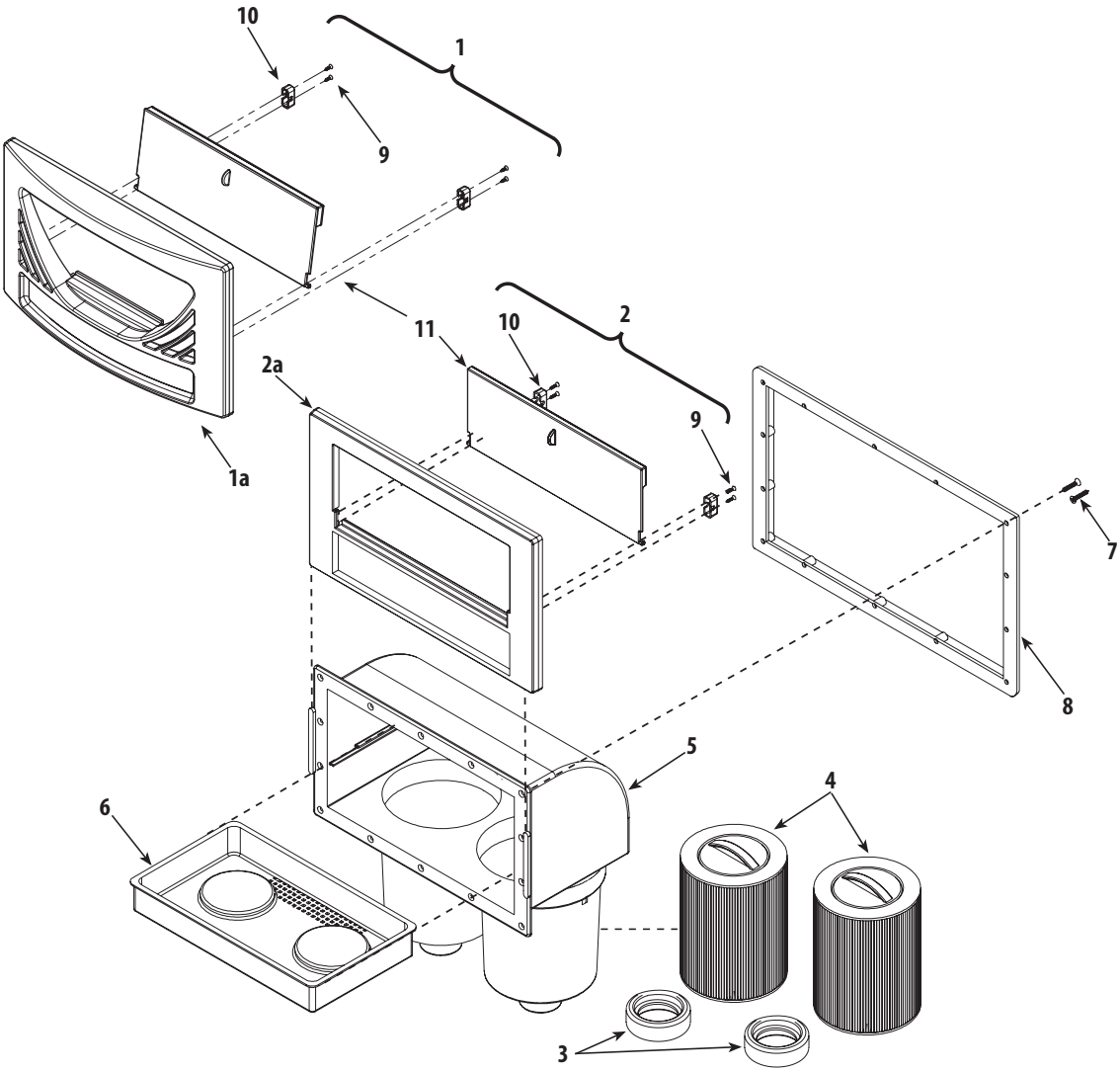

100 sq. ft. Skim Filter Replacement Parts

Item	Part No.	Description	List (US $)
1	**550-6630**	Front Access Plate Assembly - Oval	74.56
1a	**519-6630**	Blank Front Access Plate - Oval	55.86
2	**550-6610**	Front Access Plate Assembly - Flat	69.81
2a	**519-6650**	Blank Front Access Plate	55.86
3	**519-6640**	Retainer Ring	10.71
4	**817-0050**	50 sq. ft. Filter Cartridge - 6" OD x 8 ¼" L	66.65
5	**550-6620**	Filter Body Assembly	112.99
6	**519-6610**	Basket	46.57
7	**819-0030**	Screw - #12 x 1 ¼" PFH	0.55
8	**519-6680**	Mounting Plate	18.60
9	**819-3260**	Screw - #6 -20 x ⅝" POH	0.12
10	**519-6240**	Hinge Mount	0.69
11	**550-6600**	Weir Door Assembly	55.86

Friction loss of water in feet of head per 100 foot length of pipe.

1. Calculate water depth in inches:

A.	Actual water depth in injector	=	_____
B.	Add ½" of water per 90° elbow	=	_____
C.	Add ⅛" of water per 45° elbow	=	_____
D.	Add 1" of water per 10 feet of 2" pipe	=	_____
E.	Add 4" of water per ½" spring check valve	=	_____
	TOTAL INCHES OF WATER	=	_____

2. Find the airflow or SCFM provided by your blower:

A. On the **Blower Performance Chart**, find the number that corresponds to the **total inches of water** needed.
B. Read across the chart until you **intersect the horsepower (HP)**, then go down for SCFM.
C. Take total SCFM and divide by 10 to get corresponding hole sizes.

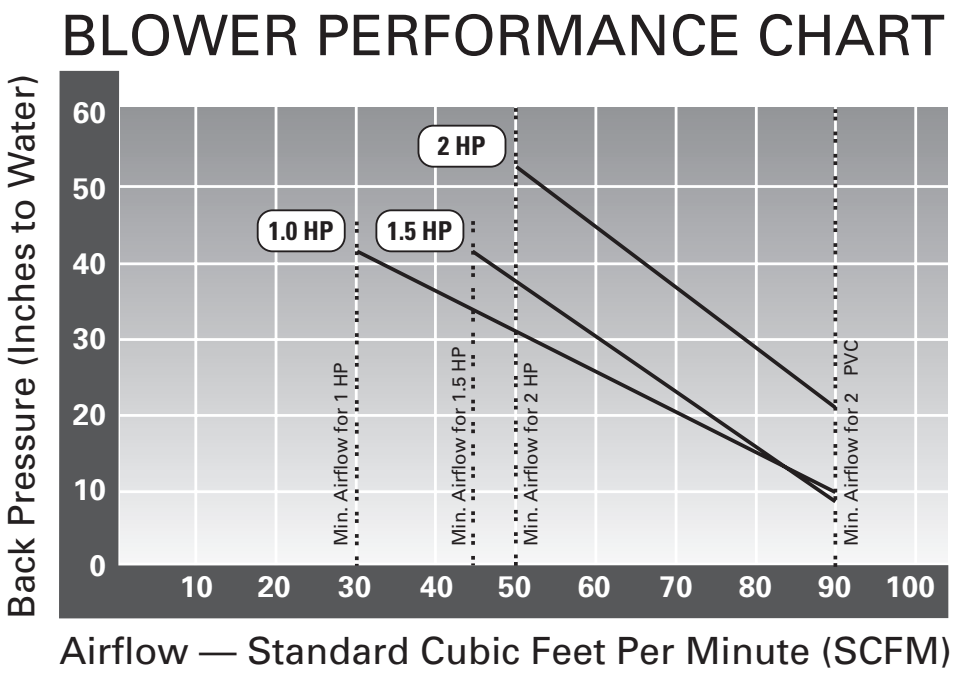

3. Calculate the number of holes by using the Air Hole Sizing Chart:

Air Hole Sizing Chart

Air Hole Size	Number of Holes Needed per 10 SCFM
⅛"	24
5/32"	15
3/16"	11
¼"	6
5/16"	4
Jet	1

Hole Saw Sizes

STORM JETS

Jets - Mini Storm	
Flat Gasket	2 3/16"
Grommet Gasket	2 1/4"
Jets - Poly Storm	
Flat Gasket	2 5/8"
Grommet Gasket	2 11/16"
Jets - Power Storm	
Flat Gasket	3 3/4"
Grommet Gasket	3 7/8"
Jets - Adjustable Cluster Storm	1 1/2"

JETS

Jets - CAD and 180°	2 1/2"
Jets - Euro	1 1/16"
Jets - Fog	9/16"
Jets - Jumbo	5 3/4"
Jets - Jumbo Storm	5 3/4"
Jets - Master Massage	5 3/4"
Jets - Mega Storm with Flat Gasket	4 3/4"
Jets - Neck	1 3/4"
Jets - Old Faithful	4 3/4"
Jets - Ozone/Cluster	1"
Jets - Poly	2 5/8"
Jets - Power Swim	3 1/2"
Jets - Quad Flo and Dual Flo	3 1/2"
Jets - Self-Draining Bath	1 3/4"
Jets - Standard Mini	1 3/4"
Jets - Swim	3 1/8"
Jets - Versatile	3 1/2"

SUCTIONS

Suction - Lo-Pro and Hi-Flo	
Flat Gasket	2 3/8"
Grommet Gasket	2 1/2"
Suction - Super Hi-Flo	
Flat Gasket	3 1/4"
Grommet Gasket	3 3/8"
Suction - Ultra Hi-Flo	
Flat Gasket	2 3/8"
Grommet Gasket	2 1/2"
Suction - Ultra Flo	
Flat Gasket	3 1/4"
Grommet Gasket	3 3/8"

AIR COMPONENTS

Air Bleed	1 5/16"
Air Button	1 1/2"
Air Control - Lo-Pro	1 5/8"
Air Control - 1/2"	1 5/16"
Air Control - 1/2" Top Access	3/4"
Air Injector - Button	3/8"
Air Injector - Lo-Pro	3/4"
Air Injector - Multi-Body	5/8"
Air Injector - Ozone	5/8"
Air Injector - Top Flow	1 3/16"

VALVES

Valves - Diverter – 1" Mini	2 1/16"
Valves - Diverter – 2" Top Access	3 1/4"
Valves - Spa Drain and Fill	1 5/8"
Valves - Turn On / Off	1 1/4"

LIGHTS

Light - 1/2"	3/8"
Light - 1"	5/8"
Light - 2 1/8"	1 5/8"
Light – 3"	2 5/8"
Light – 5" Jumbo	3 3/4"

SKIMMERS / FILTERS

Skim Filter - Bayonet	6 7/8"
Grommet Gasket	7"
Skim Filter - Dyna-Flo	6 7/8"
Grommet Gasket	7"
Skimmers - Strip	
Flat Gasket	2 3/8"
Grommet Gasket	2 1/2"
Filters - In-Line	6 7/8"
Grommet Gasket	7"
Filters - Top Load	6 7/8"
Grommet Gasket	7"
Teleweir Skim Filters	6.88"

SPECIALTY ITEMS

Aroma Therapy Canister	1 5/8"
Auto Vent	4"
Cup Holder	3 3/4"
Fittings - Thru Wall	1 5/16"
Master Massage	5 3/4"
Niche Body	8 3/4"
Power Massage	3 1/2"
Return Fitting	2 5/16"
Thermosensor	1"
Thermowell - Mini	1 3/16"
Waterway Cascade	(2) x 7/8"

To determine the GPM and PSI needed for jets desired:

1. Write in the number of jets needed and jet type.
2. Write in jet orifice size.
3. Use the Jet Flow Chart & Performance Curve (on page 259) to determine GPM and PSI.

Jet Worksheet

	Number of Jets	Jet Type	Jet Orifice Size	GPM	PSI
Example	10	Poly Storm Jets	5⁄16"	100 GPM (refer to Jet Flow Chart)	14 PSI

Total Number of Jets	Total Jet Orifices	Total GPM	PSI *(not cumulative)*

Total GPM is water volume needed to make jets work at desired PSI.
This is your TARGET FLOW and TARGET PRESSURE.
Take this number to Hydraulic Worksheet (next page) and use in Line 2.
This is the total GPM needed at a desired PRESSURE.

1. Determine required turnover rate for spa in gallons per minute (GPM).

_____ / _____ = _____
Total Gallons / Desired Turnover Rate (30 min. spa) = GPM

2. Determine GPM and PSI needed for maximum jet performance (use Jet Performance Flow Curves from page 114).

_____ _____
Target Flow (GPM) Target Pressure (PSI)

3. A. Figure resistance head of system:
From Friction Flow Chart on page 258 and Friction Loss in Fittings on page 259, convert fittings and pipe lengths into feet of head.

EXAMPLE:
A. (4) 2" 90° elbows = 4 x 8.6 = 34.4 feet of 2" pipe
B. 50 feet of 2" pipe = 50 feet
A + B: 34.4 feet + 50 feet = 84.4 feet
Looking at the Friction Flow Chart, 2" pipe at 10 feet per second gives us 100 GPM at 14.4 feet of head. This is figured in 100 foot length of pipe. We multiply .844 times 14.4 = 12.15 feet of head. Or to convert to PSI x .433 = 5.26 PSI loss.

A _____ x _____ = _____
Quantity x Fitting Type (Friction Loss) = Straight Length of Pipe

B _____ x _____ = _____
Quantity x Pipe = Straight Length of Pipe

_____ + _____ = _____
A + B = Total Pipe Length

_____ x _____ = _____
Pipe Length x Head of Loss for 100 ft. Length = Feet of Head

B. Figure Actual Head Loss of Components: (Refer to Head Loss Chart on Page 259)

EXAMPLE:
1) One 1 ½" main drain at 50 GPM has 2 feet of head.
2) One 1 ½" skimmer 50 GPM has 4 feet of head.
Total head loss of components is 6 feet of head.

Quantity	GPM	Head Loss
_____	_____	_____
_____	_____	_____

Total Head Loss of Components: _____

C. Add Head Loss from B and C for Total Resistance Head:

EXAMPLE:
12.15 feet of head (from system resistance) + 6 feet of head (from component head loss) = 18.15 feet of head

_____ + _____ = _____
Resistance of Head Fittings, etc. + Component Head Loss = TDH

D. Total of B and C is TDH (total dynamic head) of system. Convert total head into PSI by multiplying by .433:

_____ x .433 = _____
TDH x .433 = PSI

EXAMPLE:
18.15 feet of head x .433 = 7.86 PSI
(This is the amount of pressure lost in the system)

E. Add Target PSI from Jet Worksheet (or Line #2) to Total Pressure Loss (PSI) Line D to find Total Pressure Required and Total Dynamic Head of System:

_____ + _____ = _____
Jets PSI Required + System PSI Required = Total PSI Required

EXAMPLE:
14 PSI (Required for jets) + 7.86 PSI (Required for system) = 21.86 PSI

F. Match appropriate pump by looking at pump curves.

EXAMPLE:
At 22 PSI (or 50 feet of head) at 100 GPM, you can use The Executive 1 HP Pump or a 2 HP Hi-Flo Side Discharge Pump

.

Friction loss of water in feet of head per 100 foot length of pipe.

U.S. Gal. per Min.	3/4 PIPE			1 PIPE			1¼ PIPE			1½ PIPE			2 PIPE			2½ PIPE			3 PIPE		
	Vel. Ft. per Sec.	Loss in Feet	Loss in PSI	Vel. Ft. per Sec.	Loss in Feet	Loss in PSI	Vel. Ft. per Sec.	Loss in Feet	Loss in PSI	Vel. Ft. per Sec.	Loss in Feet	Loss in PSI	Vel. Ft. per Sec.	Loss in Feet	Loss in PSI	Vel. Ft. per Sec.	Loss in Feet	Loss in PSI	Vel. Ft. per Sec.	Loss in Feet	Loss in PSI
1	.60	.25	.11	.37	.07	.03	.....	.....	.....	.....	.....	.....	.....	.....	.....	.....	.....	.....	.....	.....	.....
2	1.20	.90	.39	.74	.28	.12	.43	.07	.03	.....	.....	.....	.....	.....	.....	.....	.....	.....	.....	.....	.....
3	1.80	1.92	.83	1.11	.60	.26	.64	.16	.07	.47	.07	.03	.....	.....	.....	.....	.....	.....	.....	.....	.....
4	2.41	3.28	1.42	1.48	1.02	.44	.86	.25	.11	.63	.12	.05	.....	.....	.....	.....	.....	.....	.....	.....	.....
5	3.01	5.8	2.51	1.86	1.52	.65	1.07	.39	.17	.79	.18	.08	.....	.....	.....	.....	.....	.....	.....	.....	.....
6	3.61	7.0	3.0	2.33	2.15	.93	1.29	.55	.24	.95	.25	.11	.57	.07	.03	.....	.....	.....	.....	.....	.....
8	4.81	11.8	5.1	2.97	3.6	1.56	1.72	.97	.42	1.25	.46	.2	.76	.14	.06	.54	.05	.02	.....	.....	.....
10	6.02	17.9	7.75	3.71	5.5	2.4	2.15	1.46	.63	1.58	.69	.3	.96	.21	.09	.67	.09	.04	.....	.....	.....
15	9.02	37.8	16.37	5.57	11.7	5.07	3.22	3.07	1.33	2.36	1.45	.63	1.43	.44	.19	1.01	.18	.08	.65	.07	.03
20	.....	.....	.....	7.42	19.9	8.62	4.29	4.2	1.82	3.15	2.47	1.07	1.91	.74	.32	1.34	.30	.13	.87	.12	.05
25	.....	.....	.....	9.28	30.0	13.0	5.36	7.9	3.42	3.94	3.8	1.6	2.39	1.11	.05	1.67	.46	.2	1.08	.16	.07
30	.....	.....	.....	11.14	42.0	18.19	6.43	11.1	4.8	4.73	5.2	2.3	2.87	1.55	.67	2.01	.65	.28	1.30	.23	.1
35	.....	.....	.....	.....	.....	.....	7.51	14.7	6.37	5.52	7.0	3.03	3.35	2.06	.89	2.35	.88	.38	1.52	.30	.13
40	.....	.....	.....	.....	.....	.....	8.58	18.9	8.2	6.30	8.9	3.9	3.82	2.63	1.14	2.64	1.11	.48	1.73	.39	.17
45	.....	.....	.....	.....	.....	.....	9.65	23.5	10.18	7.09	11.1	4.8	4.30	3.28	1.4	3.01	1.39	.6	1.95	.48	.21
50	.....	.....	.....	.....	.....	.....	10.72	28.5	12.3	7.88	13.5	5.8	4.78	4.0	1.7	3.35	1.69	.73	2.17	.58	.25
60	.....	.....	.....	.....	.....	.....	.....	.....	.....	9.46	18.9	8.18	5.74	5.6	2.4	4.02	2.36	1.02	2.60	.81	.35
70	.....	.....	.....	.....	.....	.....	.....	.....	.....	11.03	25.1	10.9	6.69	7.4	3.2	4.69	3.14	1.36	3.04	1.09	.47
80	.....	.....	.....	.....	.....	.....	.....	.....	.....	.....	.....	.....	7.65	9.5	4.1	5.35	4.0	1.73	3.47	1.39	.6
90	.....	.....	.....	.....	.....	.....	.....	.....	.....	.....	.....	.....	8.60	11.8	5.1	6.03	5.0	2.2	3.91	1.73	.75
100	.....	.....	.....	.....	.....	.....	.....	.....	.....	.....	.....	.....	9.56	14.4	6.3	6.70	6.1	2.64	4.34	2.10	1.9
120	.....	.....	.....	.....	.....	.....	.....	.....	.....	.....	.....	.....	11.95	21.8	9.4	8.38	9.2	4.0	5.42	3.19	1.38
150	.....	.....	.....	.....	.....	.....	.....	.....	.....	.....	.....	.....	.....	.....	.....	10.05	12.8	5.5	6.51	4.5	1.95
175	.....	.....	.....	.....	.....	.....	.....	.....	.....	.....	.....	.....	.....	.....	.....	.....	.....	.....	7.59	5.9	2.55
200	.....	.....	.....	.....	.....	.....	.....	.....	.....	.....	.....	.....	.....	.....	.....	.....	.....	.....	8.68	7.9	3.4
225	.....	.....	.....	.....	.....	.....	.....	.....	.....	.....	.....	.....	.....	.....	.....	.....	.....	.....	9.76	9.4	4.07
250	.....	.....	.....	.....	.....	.....	.....	.....	.....	.....	.....	.....	.....	.....	.....	.....	.....	.....	10.85	11.5	4.99
275	.....	.....	.....	.....	.....	.....	.....	.....	.....	.....	.....	.....	.....	.....	.....	.....	.....	.....	.....	.....	.....
300	.....	.....	.....	.....	.....	.....	.....	.....	.....	.....	.....	.....	.....	.....	.....	.....	.....	.....	.....	.....	.....
325	.....	.....	.....	.....	.....	.....	.....	.....	.....	.....	.....	.....	.....	.....	.....	.....	.....	.....	.....	.....	.....

AWG Wire Size												
Amps	14		12		10		8		6		4	
	115 Volts	230 Volts	115 Volts	230 Volts	115 Volts	230 Volts	115 Volts	230 Volts	115 Volts	230 Volts	115 Volts	230 Volts
2	595	1190	946	1891	1479							
3	397	794	630	1261	986							
4	298	595	470	946	740	1479	1161		1808			
5	238	476	378	756	592	1184	926	1858	1447			
6	198	397	315	630	493	986	774	1548	1206	2411	1842	
7	170	340	270	540	423	845	663	1327	1033	2067	1579	
8	149	293	236	473	370	740	581	1161	904	1808	1381	2763
9	132	265	210	420	329	658	516	1032	804	1607	1228	2456
10	119	238	189	376	296	592	464	929	723	1447	1105	2210
12	99	198	158	315	247	493	387	774	603	1206	921	1842
14			135	270	211	423	332	663	517	1033	789	1579
16			118	236	185	370	290	581	452	904	691	1381
18					164	329	258	516	402	804	614	1228
20					148	296	232	464	362	723	553	1105
22					134	269	211	422		658		1005
24					123	247	194	387		603		921
26								357		556		850
28								332		517		789
30								310		482		737
35								265		413		632
40										362		553
45										321		491
50										239		442

Friction Loss in Fittings

SIZE FITTING	½"	¾"	1"	1 ¼"	1 ½"	2"	2 ½"	3"	4"
Gate Valve (Full Open)	0.6	0.7	0.9	1.2	1.3	1.6	1.7	2.0	2.7
Elbow - 90°	3.6	4.5	5.3	6.7	7.5	8.6	9.3	11.1	13.1
Elbow - 45°	0.7	0.9	1.4	1.8	2.2	2.8	3.2	4.1	5.6
Tee (Straight Thru)	1.8	2.5	3.3	4.7	5.7	7.8	9.3	12.1	17.1
Tee (Thru Side)	4.3	5.4	6.7	8.8	10.0	12.1	13.0	17.1	21.2
Swing Check Valve	8.1	8.9	11.2	13.1	15.2	19.1	22.0	27.1	38.2

Head Loss Charts

Component	GPM	Head Loss (ft.)
Main Drain 1 ½" Outlet	20	0.5
Main Drain 1 ½" Outlet	30	1.0
Main Drain 1 ½" Outlet	40	1.5
Main Drain 1 ½" Outlet	50	2.0
Main Drain 1 ½" Outlet	60	2.5
Main Drain 2" Outlet	40	1.0
Main Drain 2" Outlet	50	1.5
Main Drain 2" Outlet	60	2.0
Main Drain 2" Outlet	70	3.0
Main Drain 2" Outlet	80	4.0
Heater	--	7.0 avg.

Component	GPM	Head Loss (ft.)
Skimmer 1 ½" Outlet	20	1.0
Skimmer 1 ½" Outlet	30	2.0
Skimmer 1 ½" Outlet	40	3.0
Skimmer 1 ½" Outlet	50	4.0
Skimmer 1 ½" Outlet	60	5.5
Skimmer 2" Outlet	20	0.5
Skimmer 2" Outlet	30	1.0
Skimmer 2" Outlet	40	2.0
Skimmer 2" Outlet	50	3.0
Skimmer 2" Outlet	60	4.0
Skimmer 2" Outlet	70	5.0
Skimmer 2" Outlet	80	6.0

Cartridge Filters	GPM (.75)	Head Loss (ft.)
25 sq. ft.	18.75	1.1
35 sq. ft.	26.25	2.0
50 sq. ft.	37.50	4.3
70 sq. ft.	52.50	7.5
75 sq. ft.	56.25	8.0
100 sq. ft.	75.00	17.5

Jet Flow Data

Jet orifices sized from ¾" to 1 ½" work better at a lower PSI. Use legend to size properly.

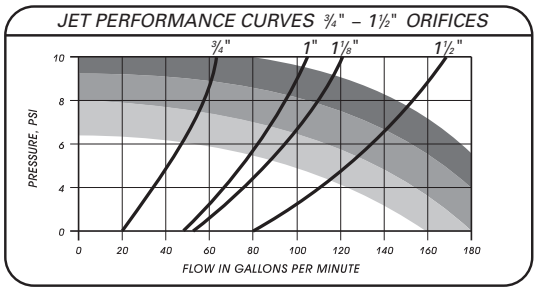

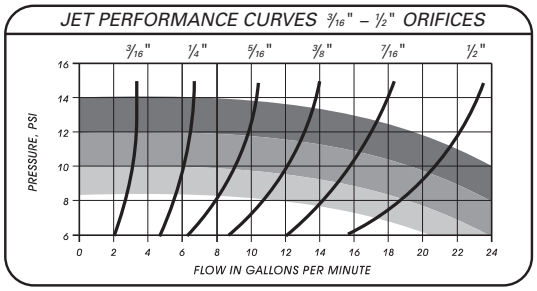

LEGEND:

- WEAK
- MODERATE
- STRONG

JET FLOW CHART

JETS				
NOZZLE ORIFICE SIZE	10 PSI	15 PSI	20 PSI	
3/16	3	4	5	GPM
¼	6	7	8	GPM
5/16	9	10	12	GPM
⅜	13	16	18	GPM
7/16	17	19	22	GPM
½	24	29	33	GPM
¾	63	65	75	GPM
1	95	116	134	GPM
1⅛	120	147	170	GPM
1½	213	260	301	GPM

Old Faithful Jets Swim Spa Configuration

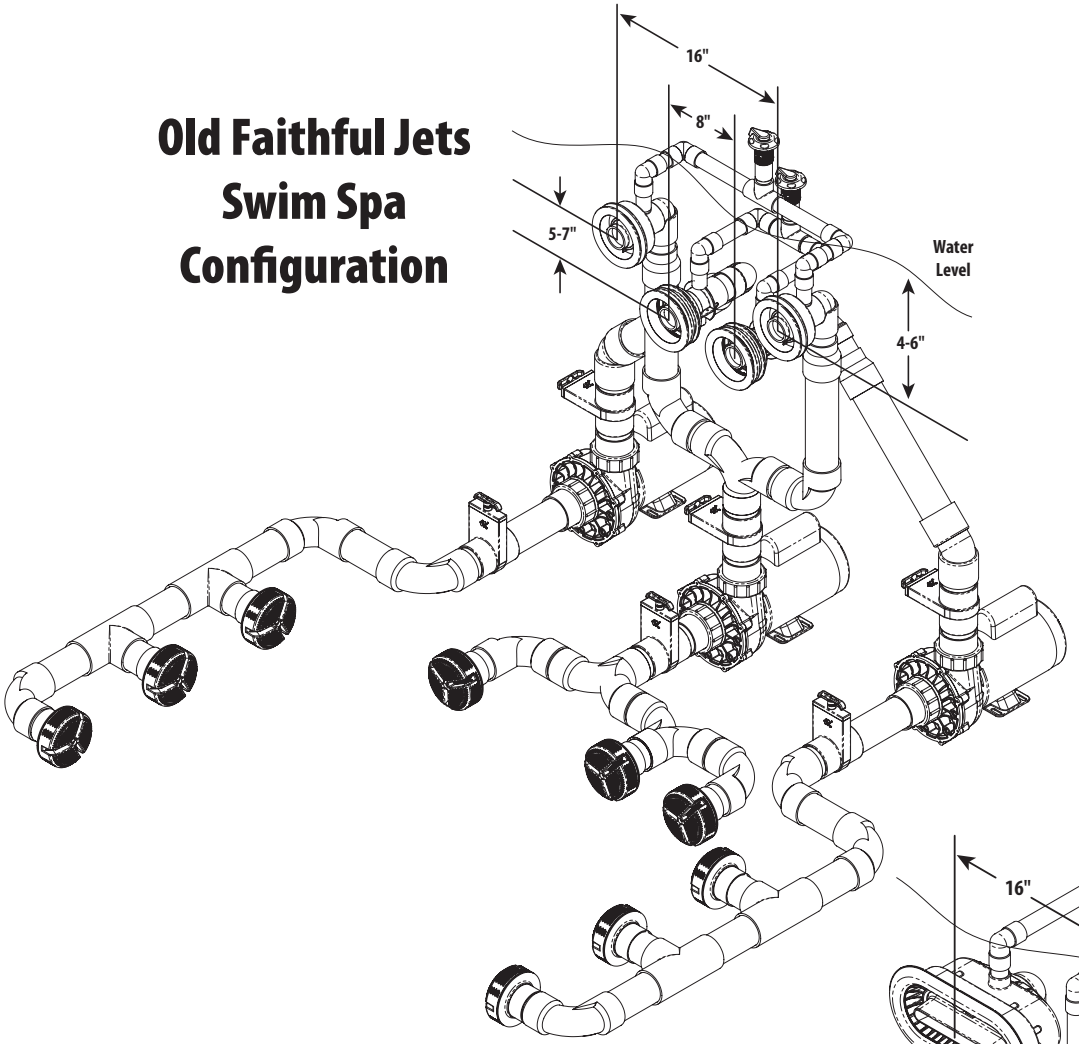

River Jets Swim Spa Configuration

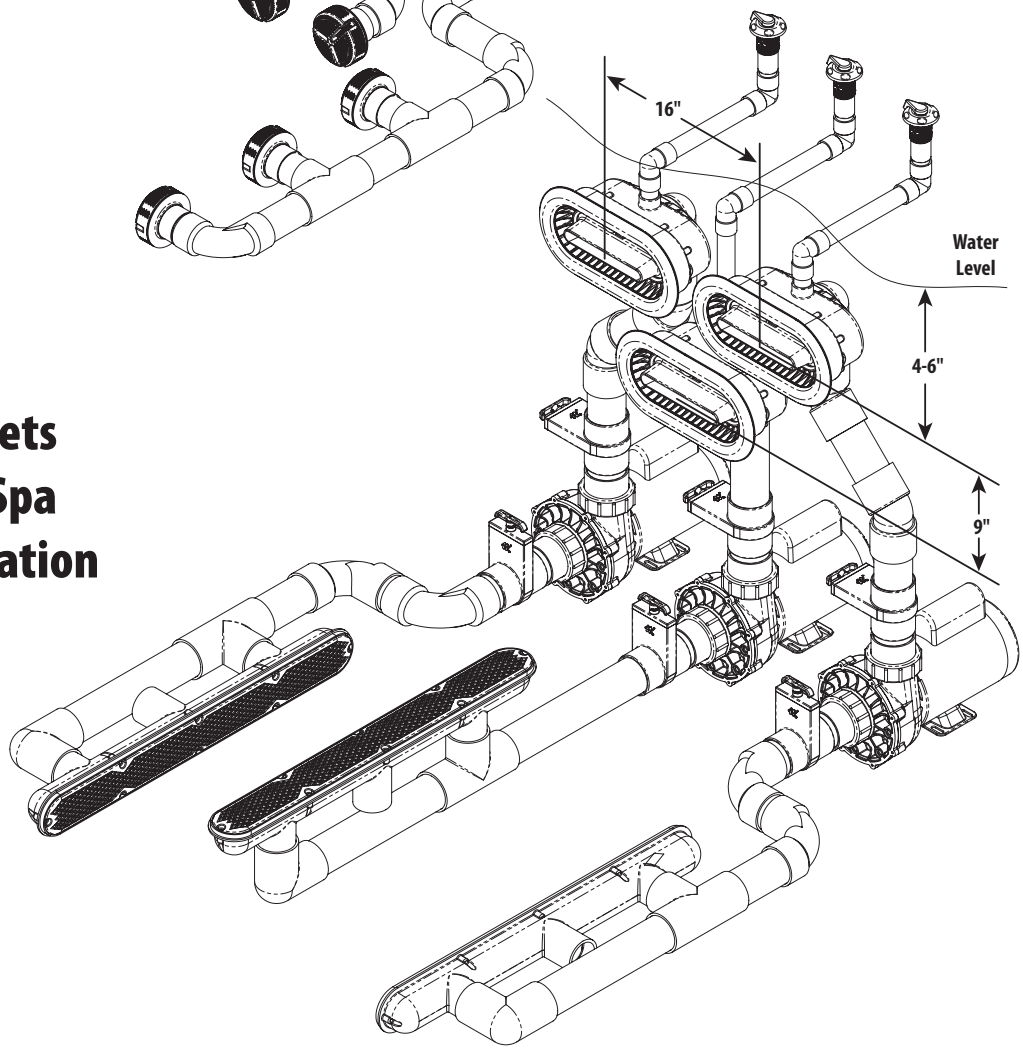

Fax Cover

To: **Waterway Customer Service**
Toll Free Fax: **888.772.5387 (888.spa jets)**

From:

Name:_____

Company:_____

Address:_____

City:_____State:_____Zip:_____

Phone:_____Fax:_____

❑ **Builder** ❑ **Mfr./OEM** ❑ **Sub Assembly** ❑ **Dealer** ❑ **Service Firm**

❑ **Swimming Pool** ❑ **Distributor** ❑ **Spa** ❑ **Whirlpool Bath**

Quantity	Part No.	Description	Price Each	Price Total

Part No.	Page
110-010x	1
110-010xP	1
110-011x	1
110-011xP	1
110-012x	1
110-012xP	1
110-014x	1
110-014xP	1
110-016W	1
110-016WP	1
110-0150	1
110-0150P	1
120-011x	1
120-011xP	1
120-012x	1
120-012xP	1
120-013x	1
120-013xP	1
120-014x	1
120-014xP	1
120-015x	1
120-015xP	1
120-016x	1
120-016xP	1
120-017x	1
120-017xP	1
120-018x	1
120-025x	1
120-025xP	1
125-011x	1
125-011xP	1
125-012x	1
125-012xP	1
130-021x	1
130-021xP	1
130-0110	1
130-0110P	1
130-0120	1
130-0120P	1
130-0130	1
130-0130P	1
210-1861	62
210-3250	27
210-3910	32
210-3910S	32
210-3920	32
210-3920S	32
210-4390	30
210-4740	32
210-4741	32
210-4747	32
210-4750	32
210-4751	32
210-4757	32
210-5100	31
210-5100S	31
210-5830	5
210-5860	5
210-5880	5
210-5910	5
210-5950	5
210-6040	5
210-7130S	33
210-7150	33
210-7150S	33
210-7170S	33
210-7180S	33
210-7260S	32
210-7270S	32
210-7300	32
210-7310	32
210-7430	32
210-7440	32
210-8160	33
210-8160S	33
210-8270S	33
210-8280S	33
210-8290S	33
210-8750	5
210-9200	58
210-9500	5
210-9540S	33
210-9550S	33
210-9790	5
211-0300	4
211-0310	4
211-0320	4
211-0520	108
211-0550	108
211-0690	108
212-0040	108
212-0090	4
212-0300	108
212-0330	108
212-0380	34
212-0390	34
212-0400	108
212-0430	108
212-0500	3
212-0500G	3
212-0540	4
212-0550	4
212-0560	4
212-0580	4
212-0590	4
212-1550G	108
212-1560G	108
212-1800	44
212-1810	76
212-1820	76
212-2000	29
212-2000G	29
212-2010	29
212-2010G	29
212-2020	29
212-2030	29
212-2030S	29
212-2050	29
212-2060	29
212-2060S	29
212-2130	29
212-2130G	29
212-4150	4
212-7757	27
212-7797	27
212-8400	2
212-8810	2
212-8830	2
212-9870	2
212-9890S	2
212-9900S	2
212-9960S	2
215-9820	2
215-9830	2
215-9840	2
215-9860	2
215-9900	2
215-9950	2
215-9960	2
217-0047	27
217-0057	27
217-7300	32
217-7320	32
218-1570	32
218-1770A	6
218-4010	28
218-4360	30
218-5150	27
218-6680	28
218-6680T	28
218-9230	44
223-0010	29
223-2100	8
223-2110	8, 108
223-2120	8
223-7940	108
224-2100	10
224-2100S	12
224-2110S	18
224-2120S	20
224-2130	10
224-2130S	12
224-2140S	18
224-2150S	20
224-2160	10
224-2160S	12
224-2170S	18
224-2180S	20
224-5700	20
224-5710	18
224-5720	22
224-6700S	18
224-6710S	20
224-6720S	22
226-0120S	20
226-0130S	18
226-0140S	21
226-1430S	20
226-1440S	18
226-1460S	20
226-1470S	18
226-1670S	21
226-1780S	21
228-0010	8
228-0020	8
228-0030	8
228-0040	8
228-0300	8
228-0310	8
228-0320	8
228-0330	8
228-0400	8
228-0410	8
228-0420	8
228-0430	8
228-0530	8
228-1550G	8
228-1560G	8
228-1570G	8
228-1580G	8
228-1720G	8
229-0100	10
229-0100S	11
229-0110S	16
229-0120S	20
229-0130S	18
229-0140S	21
229-0160	14
229-0170S	20
229-0180S	18
229-0190S	22
229-0210S	21
229-0220S	21
229-0230S	21
229-0240S	21
229-0300S	21
229-0410S	22
229-0440S	22
229-0450S	22
229-0460S	22
229-0470S	22
229-0480S	22
229-0490S	22
229-0610S	22
229-0620S	22
229-1430S	20
229-1440S	18
229-1460S	20
229-1470S	18
229-1500	14
229-1500S	11
229-1510	10
229-1520	14
229-1520S	11
229-1530	10
229-1540	14
229-1590	14
229-1670S	21
229-1770S	18
229-1780S	21
229-1790S	21
229-1920S	20
229-1930S	18
229-1940S	22
229-1950	10
229-1950S	12
229-1960	14
229-1970S	20
229-1980S	18
229-1990S	22
229-2400S	24
229-2410S	24
229-2420S	24
229-2430S	24
229-2440S	24
229-2450S	24
229-2480S	24
229-2500S	24
229-2510S	24
229-2520S	24
229-2530S	24
229-2540S	24
229-2550S	24
229-2580S	24
229-2590S	24
229-2600S	24
229-2610S	24
229-2620S	24
229-2630S	24
229-2640S	24
229-2650S	24
229-2690S	24
229-2700S	23
229-2710S	23
229-2720S	23
229-2730S	23
229-2740S	23
229-2750S	23
229-2760S	23
229-2770S	23
229-2780S	24
229-2790S	24
229-2800S	24
229-2810S	24
229-2820S	24
229-2830S	24
229-2840S	24
229-2850S	24
229-2860S	24
229-2880S	24
229-2890S	24
229-2940S	24
229-2950S	24
229-2960S	24
229-3010	14
229-3200S	18
229-3210S	18
229-3220S	18
229-3240S	18
229-3250S	20
229-3260S	20
229-3270S	20
229-3280S	20
229-3290S	20
229-3300S	23

Part No.	Page
229-3310S	23
229-3320S	23
229-3330S	23
229-3400S	25
229-3410S	25
229-3420S	25
229-3600S	20
229-3620S	20
229-3800	10
229-3800S	11
229-3830S	18
229-4020S	22
229-4030S	22
229-4040S	22
229-4050S	22
229-4060S	22
229-4070S	22
229-4090S	22
229-5310	16
229-5320	16
229-5410S	16
229-5420S	16
229-5430S	16
229-5440S	16
229-5450S	16
229-5480S	16
229-5510S	16
229-5520S	16
229-5530S	16
229-5540S	16
229-5550S	16
229-5560S	16
229-5580S	16
229-5610S	16
229-5620S	16
229-5630S	16
229-5640S	16
229-5650S	16
229-5690S	16
229-6170S	22
229-6180S	22
229-6340S	22
229-6350S	22
229-6360S	22
229-6380S	22
229-6610	10
229-6630	10
229-6640	10
229-6650	10
229-6660	10
229-7090S	20
229-7120S	20
229-7130S	20
229-7140S	20
229-7150S	20
229-7160S	20
229-7250S	18
229-7280S	12
229-7300S	12
229-7310S	12
229-7320S	12
229-7330S	12
229-7360S	12
229-7370S	12
229-7380S	12
229-7390S	12
229-7430S	12
229-7450S	12
229-7480S	12
229-7500	10
229-7510	14
229-7510S	12
229-7550S	18
229-7560S	18
229-7570S	18
229-7580S	18
229-7590S	18
229-7600	14
229-7600S	12
229-7610	14
229-7610S	12
229-7630	14
229-7630S	12
229-7640	14
229-7640S	12
229-7680S	22
229-7690S	20
229-7700S	18
229-7740	14
229-7740S	12
229-7800	14
229-7800S	11
229-7810	10
229-7820	14
229-7820S	11
229-7830	14
229-7830S	11
229-7840	14
229-7840S	11
229-7850	14
229-7850S	11
229-7900	10
229-7910	10
229-7920	14
229-7920S	11
229-7930	14
229-7930S	11
229-7940	10
229-7950	14
229-7950S	11
229-8000	10
229-8010	14
229-8010S	12
229-8020	10
229-8030	14
229-8030S	12
229-8040	10
229-8050	14
229-8050S	12
229-8060	14
229-8060S	12
229-8120	14
229-8120S	12
229-8130	10
229-8140	14
229-8140S	12
229-8150	14
229-8150S	12
229-8160	14
229-8160S	12
229-8170	14
229-8170S	12
229-8180	10
229-8190	14
229-8190S	12
229-8270	14
229-8270S	12
229-8280	10
229-8290	14
229-8290S	12
229-8310	14
229-8310S	11, 16
229-8330	14
229-8330S	11
229-8350	10
229-8370	14
229-8370S	11
229-8380	10
229-8390	14
229-8390S	11
229-8440S	22
229-8450S	22
229-8460S	22
229-8470S	22
229-8520	10
229-8530	14
229-8530S	12
229-8540	14
229-8540S	12
229-8570S	18
229-8580S	18
229-8590S	18
229-8630S	18
229-8640S	18
229-8650S	18
229-8660S	18
229-8670S	18
229-8700S	18
229-8790S	20
229-8850S	20
229-8860S	20
229-8870S	20
229-8880S	20
229-9000S	25
229-9010S	25
229-9020S	20, 25
229-9040S	22
229-9050S	22, 25
229-9060S	25
229-9100S	26
229-9130S	26
229-9140S	26
229-9150S	26
229-9160S	26
229-9170S	26
229-9180S	26
229-9190S	26
229-9200S	26
229-9210S	26
229-9220S	26
229-9230S	26
229-9240S	26
229-9250S	26
229-9260S	26
229-9270S	26
229-9280S	26
229-9290S	26
229-9300S	26
229-9310S	26
229-9330S	26
229-9340S	26
229-9350S	26
229-9360S	26
229-9370S	26
229-9380S	26
229-9400S	26
229-9410S	26
229-9420S	26
229-9430S	26
229-9440S	26
229-9450S	26
229-9460S	26
229-9480S	26
229-9490S	26
229-9500	14
229-9500S	16
229-9510S	20
229-9520S	18
229-9530S	22
229-9600	14
229-9600S	16
229-9610S	20
229-9620	18
229-9630S	22
229-9700	10
229-9700S	11
229-9710	14
229-9720	14
229-9720S	16
229-9730S	20
310-0140	90
310-0700	90
310-0800	90
310-0810	90
310-0900	128
310-1120	90
310-1130	90
310-1130SD	90
310-1140	90
310-1140SD	90
310-1141	90
310-1141SD	90
310-1150SD	90
310-1160SD	90
310-1440	90
310-1460	90
310-1480	90
310-1500	90
310-1510	90
310-1710	90
310-1720	90
310-1730	90
310-1740	90
310-1750	90
310-1800	90
310-1810	90
310-1820	90
310-1830	90
310-1840	90
310-1850	90
310-1860	90
310-1870	90
310-1880	90
310-1890	90
310-1900	90
310-1910	90
310-1920	90
310-1930	90
310-2200	127
310-2260	127
310-2270	127
310-2280	127
310-2300	126
310-2330	126
310-2340	126
310-2350	126
310-2360	90
310-2370	90
310-2380	90
310-2390	90
310-2450	90
310-2460	90
310-2480	90
310-4000	129
310-4010	129
310-4020	129
310-4030	129
310-4050	129
310-4060	128
310-4070	128
310-4090	128
310-4180	125
310-4190	125
310-4200	125
310-4210	125
310-4220	125
310-4230	125
310-5070	87
310-5120	130
310-5130	130
310-5140	130
310-5200	130
310-5400	88
311-1060	128
311-1110	130

Part No.	Page
311-1210	125
311-1220	125
311-1510	127
311-2140	129
311-2311	126
313-1400	125, 129, 130
313-3210	127
315-1060	128
315-1120	130
315-1220	125
315-1240	125
315-1500	127
315-2301	126
315-2500	129
319-0019	91
319-1270	126
319-1370	125
319-1380	125
319-1390	129
319-3010B	126, 127
319-3100B	125, 128, 129,130
3312610-14	89
3312610-19	89
3312620-14	89
3312620-19	89
3410020-0X	87
3410020-1E	88
3410030-0X	87
3410030-1E	88
3410030-1E77	88
3410310-15	86
3410410-0Z	85
3410410-1A	81
3410410-10	84
3410410-15	86
3410610-0Z	85
3410610-1A	81
3410610-1U	83
3410610-15	86
3410612-10	84
3410830-0Z	85
3410830-1A	81
3410830-10	84
3410830-13	81
3410830-15	86
3411020-1U	83
3411621-1A	81
3411621-1U	83
3411621-10	84
3411621-13	81
3420310-15	86
3420410-0Z	85
3420410-1A	81
3420410-10	84
3420410-13	81
3420410-15	86
3420610-0Z	85
3420610-1A	81
3420610-1U	83
3420610-10	84
3420610-13	81
3420610-15	86
3420620-1A	81
3420620-10	84
3420620-13	81
3420620-15	86
3420820-0Z	85
3420820-1A	81
3420820-1U	83
3420820-10	84
3420820-13	81
3420820-15	86
3421020-1U	83
3421021-1U	83
3421221-1A	81
3421221-1U	83
3421221-10	84
3421221-13	81
3421621-10	84
3421821-1A	81
3421821-1U	83
3421821-13	81
3710821-1D	80
3710821-13	80
3711221-1D	80
3711221-13	80
3711621-0T	79
3711621-1D	80
3711621-1W	83
3711621-13	80
3712021-0T	79
3712021-1D	80
3712021-13	80
3720821-1D	80
3720821-1W	83
3720821-13	80
3721220-1W	83
3721221-1D	80
3721221-1T	79
3721221-13	80
3721621-1D	80
3721621-1T	79
3721621-1W	83
3721621-13	80
3722021-0T	79
3722021-1D	80
3722021-13	80
3M21621-1W	83
3R10850-0D	82
3R11250-0D	82
3R11250-0V	82
3R20850-0D	82
3R21050-0D	82
3R21050-0V	82
400-1940	94
400-1950	94
400-1960	94
400-1970	94
400-1990	94
400-2000	96
400-2010	94
400-2020	94
400-2060	122
400-2070	122
400-3021	122
400-3031	122
400-3070	97
400-3090	97
400-4000	96
400-4010	96
400-4020	96
400-4030	96
400-4060	94
400-4100	105
400-4130	93
400-4160	97
400-4230	94
400-4240	94
400-4260	105
400-4300	95
400-4380	119
400-4420	119
400-4480	97
400-4510	94
400-5050	96
400-5080	97
400-5090	97
400-5200	97
400-5421	101
400-5461	100
400-5491	100
400-5530	96
400-5540	119
400-5570	95
400-5580	119
400-5640	94
400-5660	95
400-5670	95
400-5680	95
400-5800	95
400-5971B	95
400-5990	95
400-6000	96
400-6010	95
400-6021B	95
400-6040	119
400-9030	76
400-9120	76
400-9130	76
400-9140	76
400-9150	76
400-9220	76
400-9230	95
400-9240	95
400-9280	94
411-0350	117
411-0360	117
411-2000	103
411-2010	103
411-2020	103
411-2100	103
411-2200	103
411-3480	117
411-3490	117
411-3500	117
411-3700	117
411-4000	103
411-4010	103
411-4040	103
411-4050	103
411-4060	117
411-4080	103
411-5030	103
411-5040	103
411-5050	103
411-5060	103
411-5080	103
411-5520	119
411-5540	119
411-5550	103
411-6040	119
411-6900	134
411-9100	102
411-9110	102
411-9120	102
411-9130	102
411-9140	102
411-9150	102
411-9170	103
411-9180	103
411-9200	102
411-9210	102
413-1201	114
413-1770	105
413-1800	117
413-1810	106
413-1820	106
413-1850	117
413-1860	117
413-1900	114
413-1920	117
413-1980	104
413-2000	104
413-2020	106
413-2030	104
413-2060	104
413-2080	104
413-2090	104
413-2120	104
413-2130	104
413-2140	104
413-2150	104
413-2160	101
413-2180	104
413-2210	104
413-2320	105
413-3010	104
413-4000	104
413-4100	106
413-4130	106
413-4140	106
413-4160	106
413-4180	46
413-4200	46
413-4350	114
413-4360	117
413-4370	117
413-4400	122
413-4410	122
413-4510	108, 117
413-4520	108
413-5030	104
413-5040	106
413-5080	106
415-4000	98
415-4021	100
415-5000	99
415-5201	101
415-6000	99
417-2000	98
417-2090	101
417-4000	98
417-4010	98
417-4020	98
417-4030	98
417-4050	100
417-4060	98
417-4070	98
417-4080	98
417-4090	100
417-4100	98
417-4110	98
417-4120	100
417-4220	99
417-5010	99
417-5020	99
417-5040	99
417-5050	101
417-5060	101
417-5070	101
417-5080	98
417-5090	99
417-5120	99
417-5130	99
417-5140	101
417-5157	101
417-5180	101
417-5500	98
417-5970	99
417-5980	101
417-6000	99
417-6010	99
417-6020	98
417-6030	99
417-6040	98
417-6050	99
417-6080	138
417-6127	120
417-6137	120
417-6140	118
417-6197	120
419-0900	108, 118
419-1000	114
419-1920	108, 118

Part No.	Page
421-1000	120
421-1050	120
421-4010	120
421-4020	120
421-4030	120
421-4070	120
421-5000	120
423-4000	120
425-0210	114
425-1000	117
425-1010	118
425-1030	117, 118
425-1080	114
425-4000	113
425-4020	114
425-4040	114
425-5010	114
429-4000	93
429-4030	93
500-1000	132, 133
500-1021	76
500-1060	132
500-1070	76, 132
500-2500	74
500-2510	74
500-2540	74
500-2550	74
500-2680	135
500-2697	137
500-5000	74
500-5010	74
500-5050	74
500-6010	74
500-6050	74
500-7500	75
500-7510	75
500-7550	75
500-9900	75
500-9910	75
500-9950	75
502-2500	74
502-2510	74
502-2530	74
502-2550	74
502-5000	74
502-5010	74
502-5030	74
502-5050	74
502-7500	75
502-7510	75
502-7550	75
502-9900	75
502-9910	75
510-1150	77
510-1500	68
510-1600	68
510-1650T	68
510-3520	72
510-3540	72
510-3550	72
510-4520	72
510-4540	72
510-4550	72
510-4590	71
510-4600	71
510-4620	71
510-4630	71
510-6520	72
510-6540	72
510-6550	72
510-6600	69
510-6620	69
510-6680	70
510-6700	69
510-6900	66
510-6910	66
510-9000	69
510-9020	69
510-9100	69
510-9520	72
510-9540	72
510-9550	72
511-1000	132
511-1010	133
512-0210	73
512-0270	73
512-2510	73
512-2550	73
512-2570	73
514-6550	73
515-1010	133
519-0231	122
519-0300	131
519-1051	132
519-1600	138
519-2031	77
519-2041	77
519-3010	135
519-4030	138
519-4050	138
519-4090	138
519-6240	139, 140
519-6610	140
519-6630	140
519-6640	139, 140
519-6650	140
519-6680	140
519-6900	134
519-6940.L	134
519-6940.R	134
519-6950	134
519-6960	134
519-6970	134
519-6980	134
519-8000	135
519-8050	135
519-8070	135
519-8150	137
519-8160	137
519-8260	136
519-8310	131
519-9010	139
519-9040	139
519-9050	139
535-2209-BRK	121
535-2209-CIN	121
535-2209-CSG	121
535-2209-GPH	121
535-2209-RDW	121
550-0120	77
550-1500	138
550-1600	77
550-2630	135
550-4060	138
550-4080	138
550-4090	138
550-4990	132
550-5000	132
550-5010	132
550-5060	132
550-5110	132
550-5150	132
550-5220	132
550-5230	132
550-5610	77
550-5735-1	131
550-5750-1	131
550-5775-1	131
550-5835-1	131
550-5850-1	131
550-5875-1	131
550-6600	140
550-6610	140
550-6620	140
550-6630	140
550-6800	93
550-6810	93
550-6910	134
550-7760	77
550-8620	136
550-8631	136
550-9000	139
550-9010	139
600-1000	132, 133
600-1020	136
600-1040	131, 132, 135
600-2300	92
600-2340	92
600-2350	92
600-2370	92
600-2380	92
600-3010	38
600-3020	37
600-3030	41
600-3038L-DSG	57
600-3040	37
600-3060	38
600-3110	40
600-3140	39
600-3150	39
600-3160	39
600-3170	39
600-3180	39
600-3190	39
600-3210	39
600-3220	39
600-3230	39
600-3240	41
600-3248L-DSG	57
600-3250	40
600-3260	41
600-3268L-DSG	57
600-3270	41
600-3278L-DSG	57
600-3280	40
600-3290	40
600-3300	41
600-3308L-DSG	57
600-3310	41
600-3320	41
600-3328L-DSG	57
600-3330	40
600-3340	40
600-3500L	58
600-3510L	58
600-3520L	58
600-3600	39
600-3610	39
600-3620	39
600-3630	40
600-3700	43
600-3708L-DSG	57
600-3710	43
600-3718L-DSG	57
600-4000	93
600-4200	38
600-4210	37
600-4220	37
600-4230	37
600-4330	38
600-4340	38
600-4360	37
600-4368L	57
600-4370	37
600-4378L	57
600-4380	37
600-4388L	57
600-4400	39
600-4410	39
600-4420	39
600-4430	43
600-4438L-DSG	57
600-4440	43
600-4448L-DSG	57
600-4468L-DSG	57
600-4478L-DSG	57
600-4600	37
600-4700	37
600-4710	37, 108
600-4720	39
600-4730	39
600-4750	38
600-4770	42
600-4778L-DSG	57
600-4780	38
600-4790	42
600-4798L-DSG	57
600-4800	42
600-4808L-DSG	57
600-4810	42
600-4818L-DSG	57
600-4830	42
600-4838L-DSG	57
600-4840	42
600-4848L-DSG	57
600-5000	93
600-5080	93
600-8140	93
600-8150	93
600-8160	93
600-9101	122
600-9167	122
602-4440	37, 39, 40, 41, 43
602-8210	136
611-5001	123
611-6090	123
611-7000	123
616-1100	123
616-1300	123
616-1400	123
616-1600	123
616-1800	123
616-2000	123
616-3001	123
616-4001	123
630-0005	62
630-0008	59
630-0008S	59
630-0038	60
630-1105	61
630-1115	61
630-5005	61
630-5008	59
630-5105	61
630-5115	61
630-5205	61
630-6005	61
630-6105	61
630-6115	61
630-6205	61
630-K005	62
630-K008	59
630-K008S	62
630-K105	62
630-K115	62
633-7078	59
633-7088	59
633-7098	59
640-134xLG V	53
640-325x VP	48
640-328x VP	48
640-348x VP	48
640-349x VP	49
640-378x V	51

Part No.	Page
640-379x V	51
640-393x VP	52
640-394x VP	52
640-520x V	50
640-525x V	50
640-530x V	50
640-535x V	50
640-2000	122
640-2001	122
640-3170	76
640-3570S V	51
640-3580S V	51
640-4220	76
640-4230	76
640-4240	76
640-6600	67
640-6920	67
640-6940	67
640-6960	67
642-3610	51, 52
642-3680	51, 52
642-3700	51, 52
642-3730	51, 52
642-3750	51, 52
660-3000	46
660-3500L	58
660-3510	46
660-3520	46
660-3530	46
660-3560	46
660-3570	46
660-3580	46
660-3590	46
660-3598L-DSG	57
660-3600	46
660-3608L-DSG	57
660-4400	45
660-4400S	45
660-4410	45
660-4410S	45
660-4440	45
660-4450	45
660-4770	46
660-4778L-DSG	57
660-6300	59
660-6400	60
662-2700	124
662-2710	124
662-2720	124
662-2730	124
670-1100	93
670-2000	76
670-2190	35
670-2200	35
670-2210	35
670-2290	35
670-2300	35
670-2310	35
670-2330	35
670-2350	35
670-2360	35
670-2380	35
670-2390	35
670-2500	35
670-2600	35
670-2800	124
672-0041	60
672-0400	113
672-0410	113
672-0420	113
672-0550	112
672-0600	124
672-1000	91
672-1010	91
672-1020	91
672-1030	91
672-1060	91
672-1080	91
672-1100	91
672-1160	91
672-1320	91
672-1430	114
672-1440	114
672-1450	114
672-1460	118
672-3900	113
672-4010	112
672-4020	112
672-4030	112
672-4040	112
672-4070	112
672-4097	113
672-4100	112
672-4110	109
672-4120	109
672-4130	109
672-4140	108, 115
672-4150	108, 115
672-4160	108, 115
672-4170	108, 115
672-4180	110
672-4190	110
672-4200	110
672-4210	110
672-4250	109
672-4260	110
672-4270	110
672-4280	110
672-4310	117
672-4320	117
672-4340	113
672-4350	114
672-4370	112
672-4380	109
672-4390	111
672-4400	110
672-4410	108, 115
672-4430	109
672-4490	108, 115
672-4550	111
672-4570	109
672-4580	109
672-4610	112
672-4620	111
672-4630	109
672-4640	110
672-4660	113
672-4670	110
672-4680	108, 115
672-4690	112
672-4700	112
672-4770	115
672-4900	108, 115
672-4910	108, 115
672-4920	108, 115
672-4930	108, 115
672-4940	108, 115
672-4960	108, 115
672-4980	116
672-5060	112
672-5070	113
672-5080	113
672-5090	69
672-5200	115
672-6970	111, 115
672-7100	108, 116
672-7110	108, 116
672-7120	108, 116
672-7130	108, 116
672-7140	108, 116
672-7150	108, 116
672-7160	108, 116
672-7170	108, 116
672-7180	108, 116
672-7190	111
672-7250	91
672-7360	115
672-7370	115
672-7380	115
672-7900	109
672-7910	110
672-7920	108, 115
672-7930	108, 115
672-8000	106
672-8010	106
672-8020	106
672-8040	106
672-8050	106
672-9001	65
672-9011	65
672-9101	65
672-9900	123
675-0100	63
675-0200	65
675-0211	65
675-0217	65
675-0219-DSG	65
675-0219-STS	65
675-0460	65
675-0460L	65
675-0600	64
675-0630	63
675-0630L	63
675-0700	56
675-0710	56
675-0720	56
675-0730	56
675-0790L	56
675-0800	56
675-0810	56
675-0820	56
675-0830	56
675-0908L	56
675-0918L	56
675-0928L	56
675-0938L	56
675-2000	56
675-2000S	56
675-3500	54
675-3500S	54
675-3508L	54, 58
675-3508LS	54, 58
675-3550	54
675-3550S	54
675-3558L	54
675-3558LS	54
675-3600	54
675-3600S	54
675-3608L	54, 58
675-3608LS	54, 58
675-3660	54
675-3660S	54
675-3668L	54
675-3668LS	54
675-3700	54
675-3700S	54
675-3708L	54, 58
675-3708LS	54, 58
675-3770	54
675-3770S	54
675-3778L	54
675-3778LS	54
675-4000	55
675-4000S	55
675-4008L	58
675-4900	55
675-4900S	55
675-4908L	58
675-6501	124
675-6507	124
675-6509-BRN	124
675-6530	124
676-0300	64
676-0310	64
680-2000	77
700-1011-000	36
700-1022-000	36
700-1511-000	36
700-1522-000	36
700-2011-000	36
700-2022-000	36
711-0010	46
711-0020	35
711-1010	132, 133, 135
711-1730	6
711-1750	6
711-3050	44
711-3280	77
711-4000	98, 100
711-4010	99, 101
711-4020	99, 101
711-4030	101
711-4050	100
711-4310	44
711-4350	134
711-4400	28
711-4410	28
711-4430	28
711-4600	44
711-4750	6
711-6020	101
711-6500	28
711-6608	28
711-6620	28
711-6900	28
711-6910	28
711-6920	28
711-6930	62
711-7000	134
711-7300	32
711-8010	77
711-8200	136
715-0000	120
715-0040	108, 120
715-1001	132, 133
715-1010	132, 133
715-1201	125, 127, 129, 130
715-2000	120
715-2150	118
715-4000	120
715-4020	126
715-9770	120
715-9850	120
715-9860	120
715-9870	120
715-9880	120
715-9890	120
715-9900	132
718-1000	131, 132, 135, 137
718-3150	134
718-6960	28
718-7000	134
718-8200	136
730-1000	46
805-0014	119
805-0112	125, 126, 127, 129, 130
805-0114	132, 133
805-0132	6
805-0145	99
805-0164	126
805-0224	100
805-0226	98

Part No.	Page
805-0229	101
805-0232	99
805-0248	128
805-0252	130
805-0256	129
805-0261	125
805-0264	127
805-0360	132, 133
806-0010	28
806-0011	28
806-0012	28
806-0013	28
806-0100	122
806-1070	138
811-8160	119
813-4370	62
813-4400	62
813-4500	62
817-0009	134
817-0010	78, 138
817-0011	78
817-0012	78
817-0014	78
817-0015	78
817-0016	78
817-0017	136
817-0018	136
817-0019	136
817-0050	78, 139, 140
817-1000	78, 132
817-2500	78, 132, 133, 135, 137
817-3501	78, 135, 137
817-3510	78
817-4035	131
817-4050	131
817-4075	131
817-5000	78, 132, 133, 135, 137
817-5010	78
817-7500	78, 132
819-0006	139
819-0030	140
819-0114	134
819-1110	125, 126, 127, 128, 129, 130
819-3260	139, 140
819-6930	138
865-1000	138
872-0004	122
880-1500	92
880-1510	92
880-1599	92
880-2000	92
880-2010	92
880-2020	92
880-2099	92
880-2500	92
880-2520	92
880-2599	92
916-0030	46
916-1010	138
916-1250	6
916-3001	46

Waterway 2011 Spa Product Buyer's Guide

Waterway products are American made with pride in Oxnard, California within 450,000 square feet of manufacturing and warehousing facility. With strict quality control for performance and durability, our products, where applicable, are certified and registered under UL, ANSI, NSF, TUV and other US and world standards organizations. Our facilities include a full-service engineering and mold department, over 130 injection molding machines, and the flexibility to custom design your delivery schedule and procedures-- all under one roof.

Look to Waterway for genuine pool and spa products and equipment. Industry leaders and innovators since 1973.

Designed, Engineered, and Manufactured in the USA with Ratings You Can Trust.

Made in the USA

Waterway™

Waterway Plastics
2200 E. Sturgis Road, Oxnard, California 93030 • Ph. 805-981-0262 • Fax 805-981-9403
www.waterwayplastics.com • waterway@waterwayplastics.com

Waterway Europe (NovaTech)
Londonstr. 14 97424 Schweinfurt/Germany • Ph. 49 9721 299 100 • Fax 49 9721 299 200
www.waterwayeurope.com • info@waterwayeurope.com

Made in the USA

PN 990-1039 / © 2010 Waterway Plastics / 2.25 US

Waterway™