In the Box

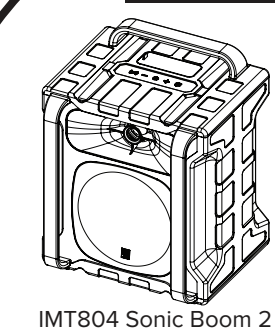

IMT804 Sonic Boom 2
Rugged Bluetooth Speaker

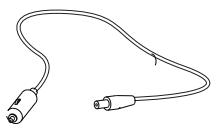

12V Car Charger

3.5mm Auxiliary Cable

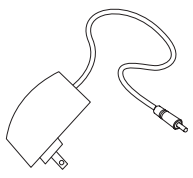

AC Adapter

A Closer Look

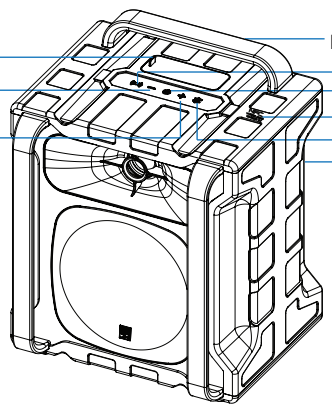

Charging

4-5 Hours
Full Charge

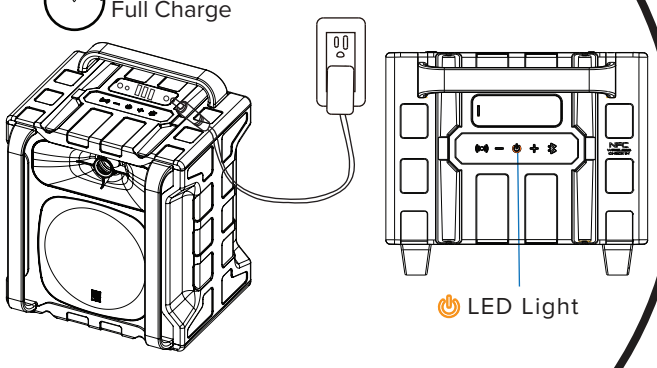

When charging, an orange LED light will illuminate. The orange light will turn off when your unit is fully charged.

Powering On/ Bluetooth Pairing

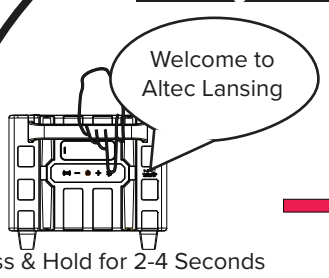

Press & Hold for 2-4 Seconds
Flashing Blue = Ready to Pair

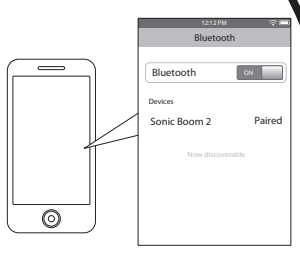

OR

For NFC-Enabled Phones

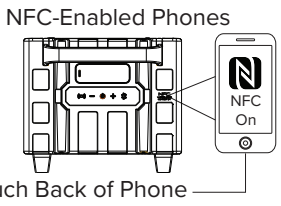

Touch Back of Phone
to Altec Lansing Logo

House Party Mode

After Connecting Bluetooth
PRESS & HOLD 2-3 SECONDS

= Master Speaker, Ready to Pair

Any Additional Speakers
TAP ONCE

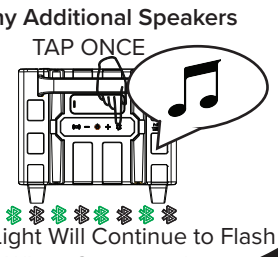

Green Light Will Continue to Flash
When Connected

Beast Mode

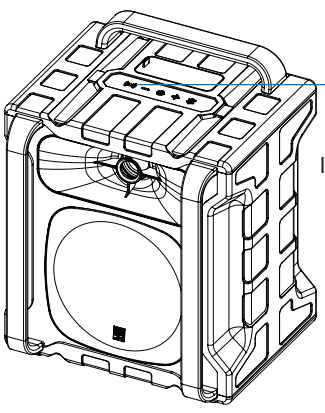

Activate Beast Mode to
Increase the Audio Power of
Your Speaker

Controlling Music

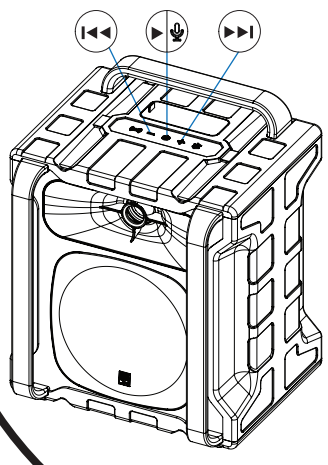

PRESS
Play/Pause
Volume Up
Volume Down

PRESS x2
JUST ASK
Activate Siri/
Google Assistant

PRESS & HOLD
Next Track
Previous Track

Answering Calls

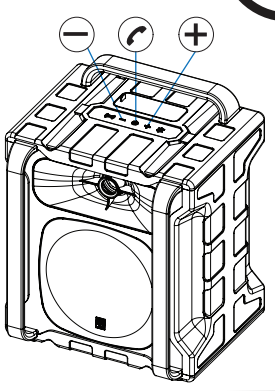

PRESS
Volume Up
Volume Down
Answer Call/
End Call

PRESS & HOLD
Ignore Call

For additional user materials and
warranty information, please
visit alteclansing.com

est.
FIRST

FOLLOW US ON #myalteclansing